THIS DRAWING IS UNPUBLISHED. RELEASED FOR PUBLICATION -,- .
© COPYRIGHT - By - ALL RIGHTS RESERVED.

| LOC | DIST |
|---|---|
| AF | 50 |

REVISIONS

| P | LTR | DESCRIPTION | DATE | DWN | APVD |
|---|---|---|---|---|---|
| | U1 | REVISED PER ECO-11-004587 | 11MAR11 | RK | HMR |

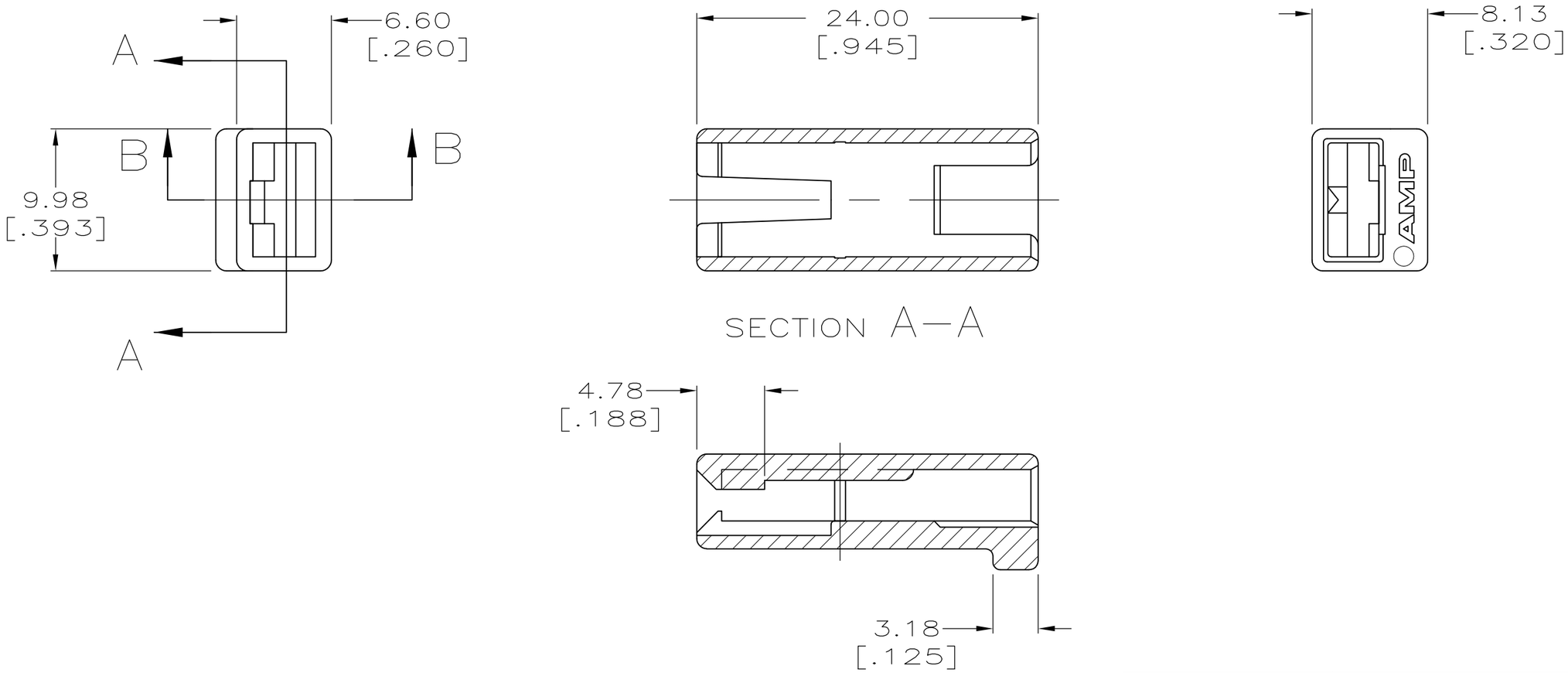


| COLOR | MATERIAL | PART NO. |
|---|---|---|
| RED | 6/6 NYLON | 480054-5 |
| BLACK | 6/6 NYLON | 480054-4 |
| NATURAL | 6/6 NYLON | 480054-3 |
| OBSOLETE ~~BLACK~~ | ~~CYCOLAC~~ | ~~480054-2~~ |

THIS DRAWING IS A CONTROLLED DOCUMENT.

DIMENSIONS: mm [INCHES]

TOLERANCES UNLESS OTHERWISE SPECIFIED:

| | |
|---|---|
| 0 PLC | ± - |
| 1 PLC | ± - |
| 2 PLC | ± 0.38 [.015] |
| 3 PLC | ± - |
| 4 PLC | ± - |
| ANGLES | ± - |

MATERIAL: SEE TABLE

FINISH: SEE TABLE

DWN JR RUTH 08/JAN/99
CHK MS FEHER 08/JAN/99
APVD S HEADER 08/JAN/99
PRODUCT SPEC —
APPLICATION SPEC —
WEIGHT —

TE Connectivity

NAME: HOUSING, RECEPT, FASTIN-FASTON, SINGLE CIRCUIT, 6.35 [.250] SERIES

| SIZE | CAGE CODE | DRAWING NO | RESTRICTED TO |
|---|---|---|---|
| A3 | 00779 | C-480054 | — |

CUSTOMER DRAWING

| SCALE | SHEET | REV |
|---|---|---|
| 3:1 | 1 OF 1 | U1 |