REVISIONS				
LTR	DESCRIPTION	EDCN	DATE	BY/APP'D
B	ADD LAND PATTERN RECOMMENDATION.	11322	9-12-98	WS/CS
3	CHANGE TO FSPM DRAWING FORMAT	ECN-MTD56REV3	21-12-06	HALLEN

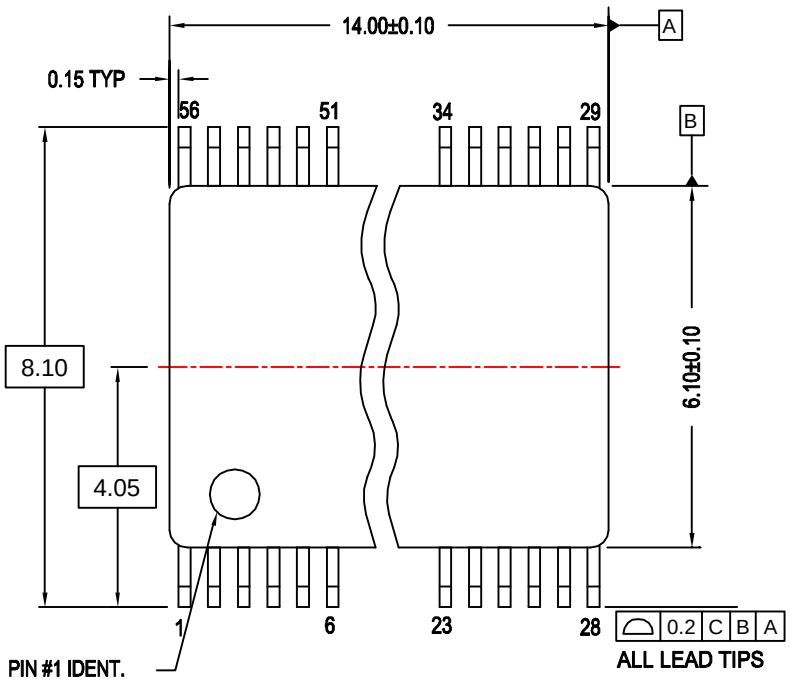

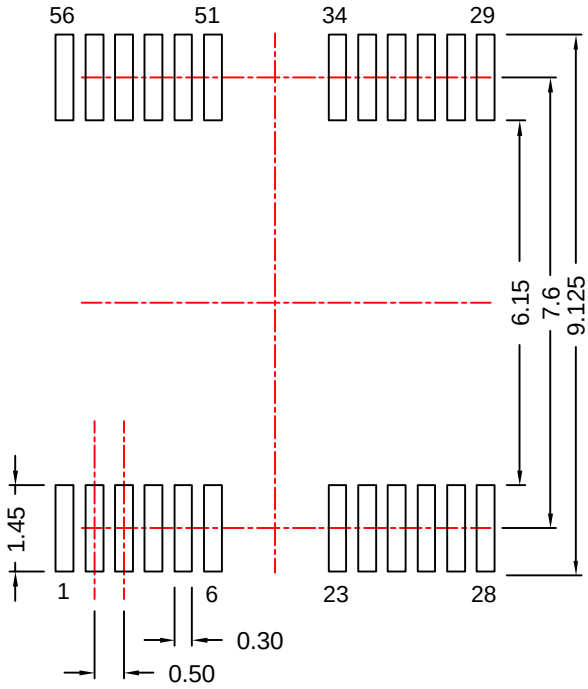

LAND PATTERN RECOMMENDATION
REFERENCE TSSOP50P810X120-56N

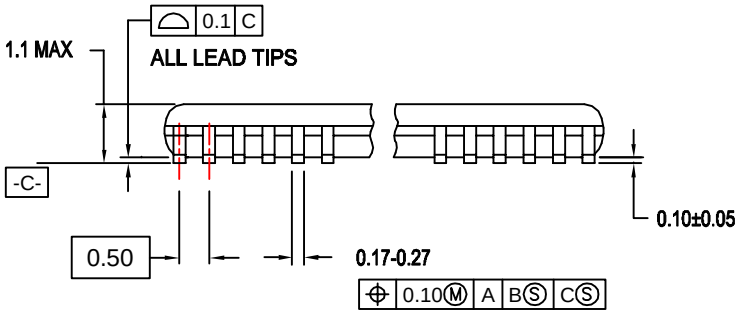

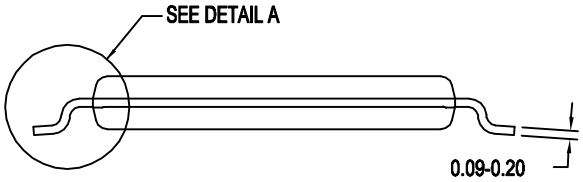

NOTES:

A. CONFORMS TO JEDEC REGISTRATION MO-153, VARIATION EE, REF NOTE 6, DATE 10/97.

B. DIMENSIONS ARE IN MILLIMETERS.

C. DIMENSIONS ARE EXCLUSIVE OF BURRS, MOLD FLASH, AND TIE BAR EXTRUSIONS.

D. DIMENSIONS AND TOLERANCES PER ANSI Y14.5M, 1982.

E. DRAWING FILE NAME: MTD56REV3

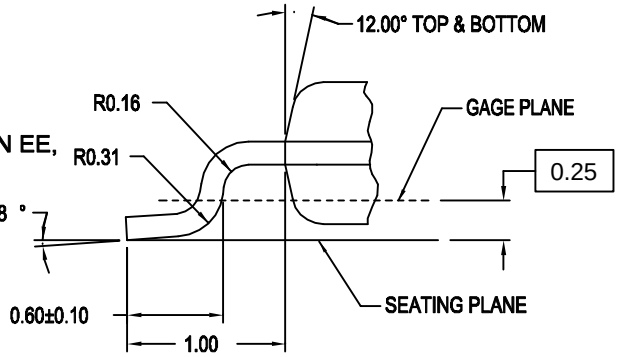

MTD56REV3

DETAIL A

APPROVALS	DATE
DRAWN FEITAN	14-6-99
DFTG. CHK. H.ALLEN	21-12-06
ENGR. CHK.	

FAIRCHILD SEMICONDUCTOR™ Bayan Lepas, FIZ, 11900, Penang, Malaysia.

56LD, TSSOP, JEDEC MO-153, 6.1MM WIDE

PROJECTION INCH [MM]

SCALE	SIZE	DRAWING NUMBER	REV
N/A		MKT-MTD56	3

DO NOT SCALE DRAWING — SHEET 1 of 1