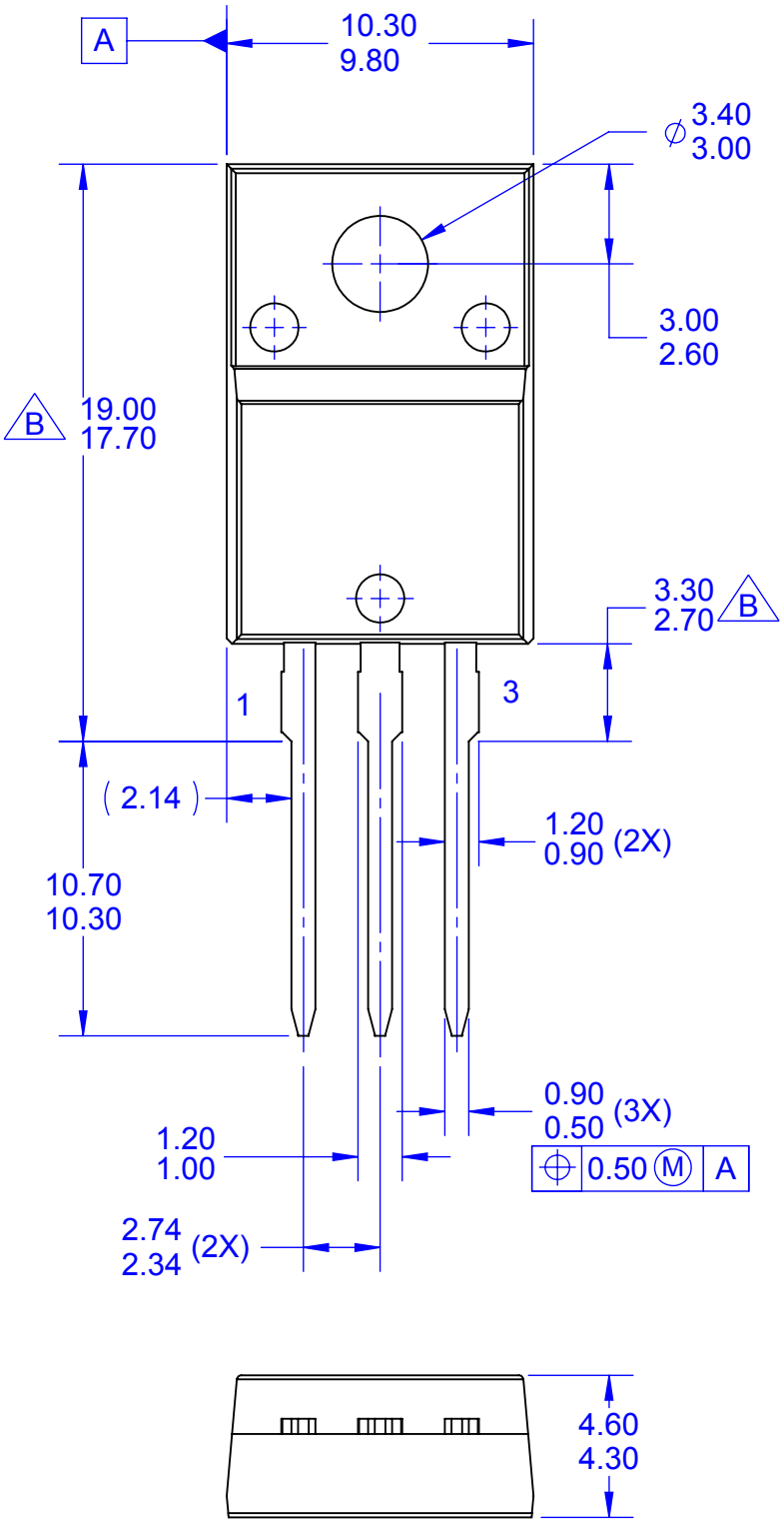

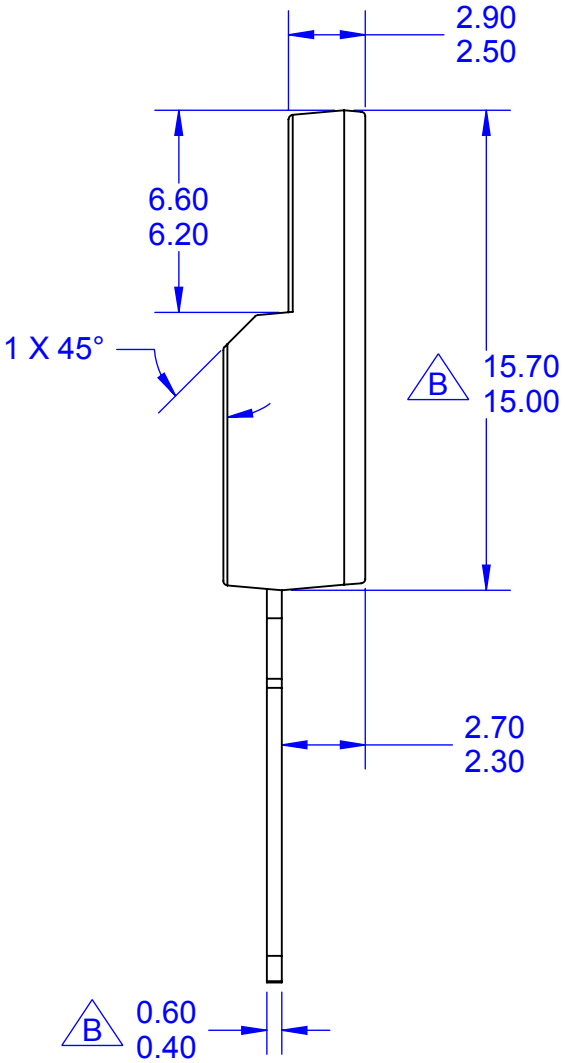

NOTES:

A. EXCEPT WHERE NOTED CONFORMS TO EIAJ SC91A.
B. DOES NOT COMPLY EIAJ STD. VALUE.
C. ALL DIMENSIONS ARE IN MILLIMETERS.
D. DIMENSIONS ARE EXCLUSIVE OF BURRS, MOLD FLASH AND TIE BAR PROTRUSIONS.
E. DIMENSION AND TOLERANCE AS PER ASME Y14.5-2009.
F. DRAWING FILE NAME: TO220V03REV1
G. FAIRCHILD SEMICONDUCTOR