REVISIONS				
LTR	DESCRIPTION	EDCN	DATE	BY/APP'D
A	RELEASE TO MARKETING	ECN-MKT- MQA20revA	11/09/2005	J KINGSBURY

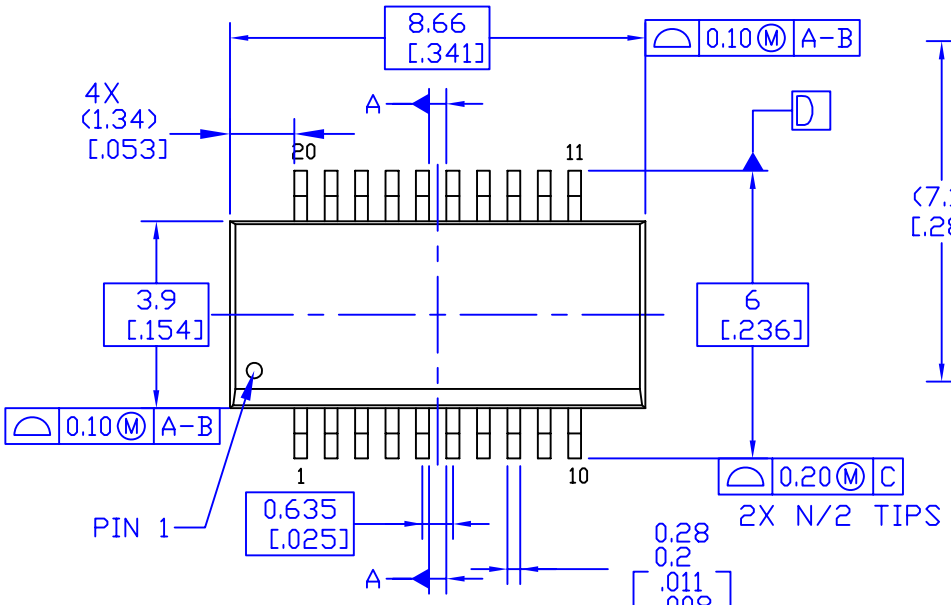

TOP VIEW

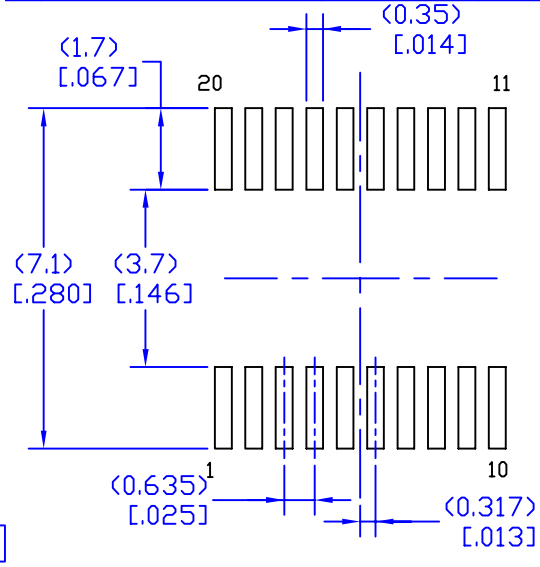

LAND PATTERN RECOMMENDATION

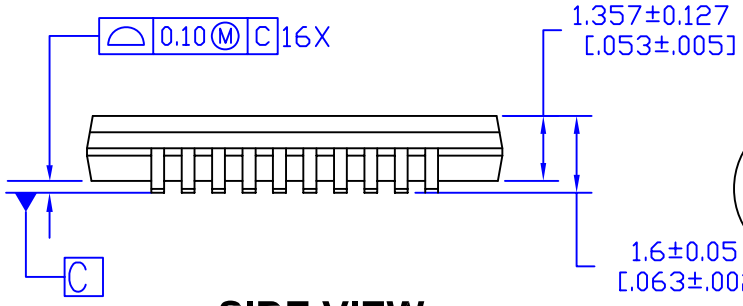

SIDE VIEW

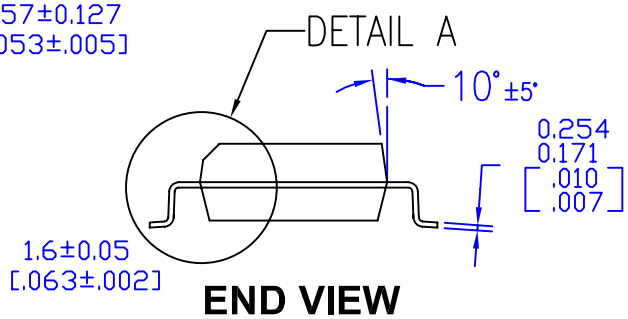

END VIEW

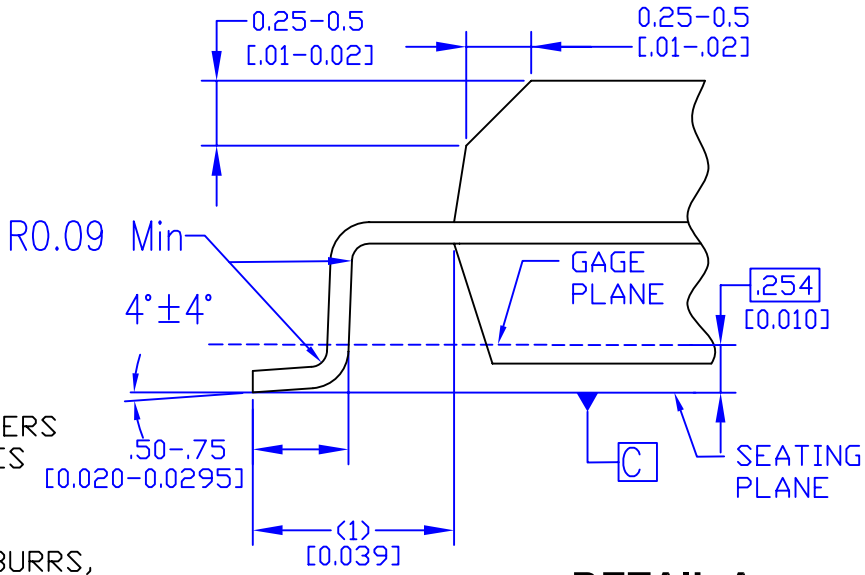

DETAIL A

NOTES :

A. THIS PACKAGE CONFORMS TO JEDEC MO-137 VARIATION AD

B. PRIMARY DIMENSIONS IN MILLIMETERS REFERENCE DIMENSIONS IN INCHES

C. DRAWING CONFORMS TO ASME Y14.5M-1994

D. DIMENSIONS ARE EXCLUSIVE OF BURRS, MOLD FLASH, AND TIE BAR EXTRUSIONS.

MQA20REVA

APPROVALS	DATE
DRAWN J. KINGSBURY	10-25-2005
DFTG. CHK. H. ALLEN	10-28-2005
ENGR. CHK. H. ALLEN	10-28-2005

FAIRCHILD SEMICONDUCTOR® Bayan Lepas, FIZ, 11900, Penang, Malaysia.

20LD, QSOP, JEDEC MO-137, .150" WIDE

PROJECTION	SCALE	SIZE	DRAWING NUMBER	REV
INCH [MM]	N/A	N/A	MKT-MQA20	A
	DO NOT SCALE DRAWING		SHEET 1 of 1	