THIS DRAWING IS UNPUBLISHED. RELEASED FOR PUBLICATION -,- .
© COPYRIGHT - BY TYCO ELECTRONICS CORPORATION. ALL INTERNATIONAL RIGHTS RESERVED.

LOC	DIST
HM	00

REVISIONS

P	LTR	DESCRIPTION	DATE	DWN	APVD
	B	REV PER 0A00-0302-96	23JUN96	JS	FA
	C	REV ECO-11-000935	14JAN2011	LH	RA

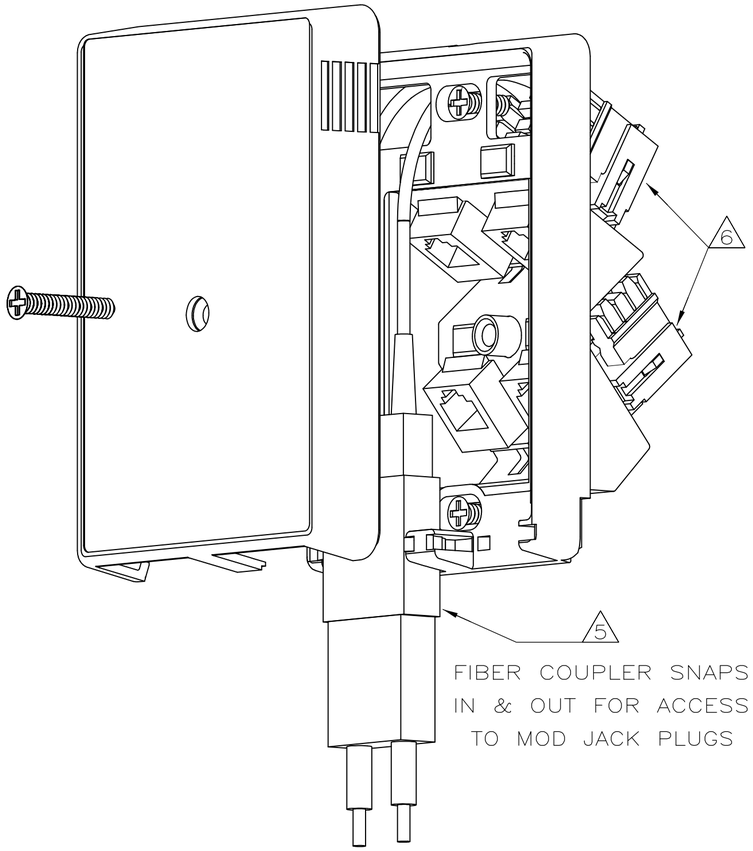

1. DIMENSIONS IN [ ] ARE IN INCHES

2. SUB-PLATE: PBT MOLDING COMPOUND
COVER-PLATE: PPE MOLDING COMPOUND
SCREWS: CARBON STEEL
ADHESIVE LABELS: POLYESTER
CABLE-TIES: NYLON

3. SCREWS: ZINC PLATE & PAINT

4. KIT INCLUDES:
SUB-PLATE (ONE)
COVER-PLATE (ONE)
ADHESIVE LABELS, INSIDE SUB-PLATE (FOUR)
CABLE-TIES (TWO)
SCREWS, SUB-PLATE, (TWO)
SCREW, COVER-PLATE, (ONE)

5. AMP SC DUPLEX FIBER COUPLER SHOWN
ALSO AVAILABLE:
AMP 2.5mm BAYONET DUPLEX COUPLER
AMP SC TO 2.5mm BAYONET DUPLEX COUPLER

6. AMP 110CONNECT MODULAR JACKS SHOWN

7. POSSIBLE OUTLET CONFIGURATIONS:
(2) FIBERS AND (1) TO (4) MOD JACK INSERTS
(2) TO (4) FIBERS AND NO MOD JACK INSERTS
(1) TO (4) MOD JACK INSERTS AND NO FIBER

8. WALL OUTLET ACCOMODATES COLOR-CODED SNAP-FIT ICONS, SOLD SEPARATELY.
COUPLERS FOR FIBER & COPPER MEDIA ALSO SOLD SEPARATELY.

9. UNDERWRITERS LABORATORIES (UL) LISTED AND CANADIAN STANDARDS ASSOCIATION (CSA) CERTIFIED.

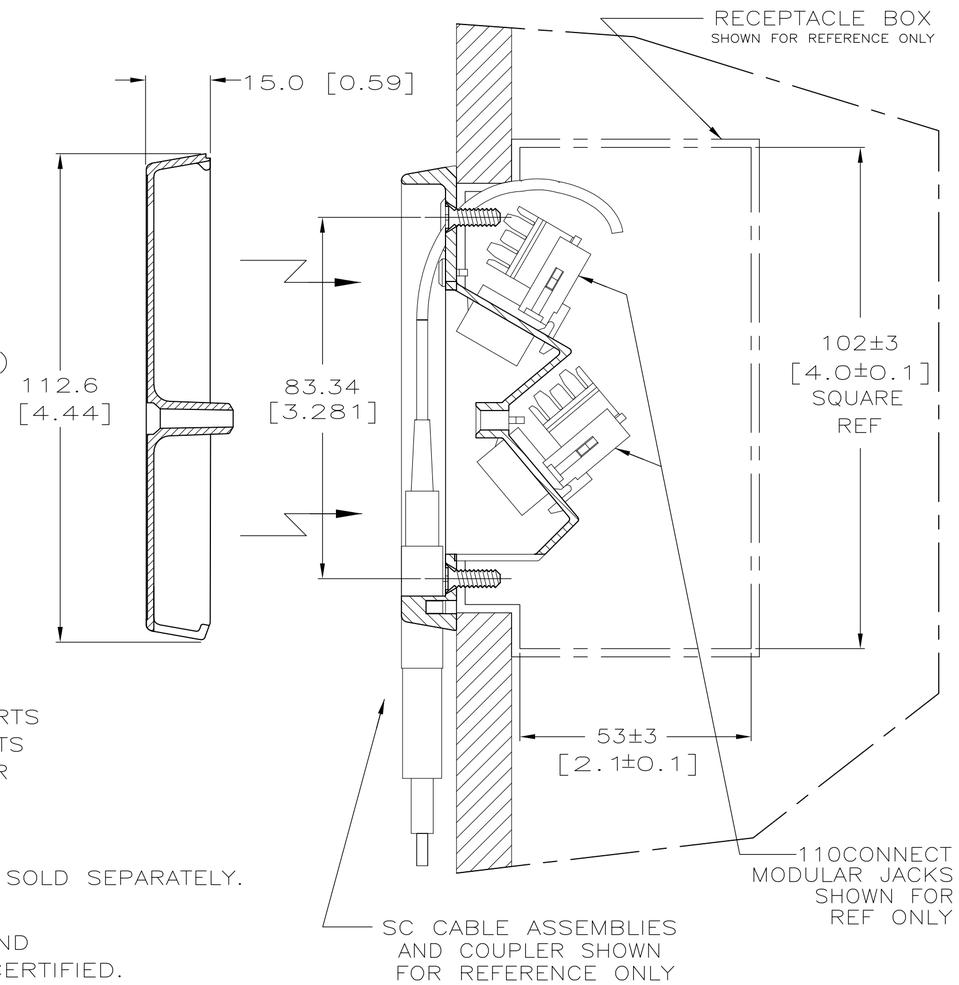

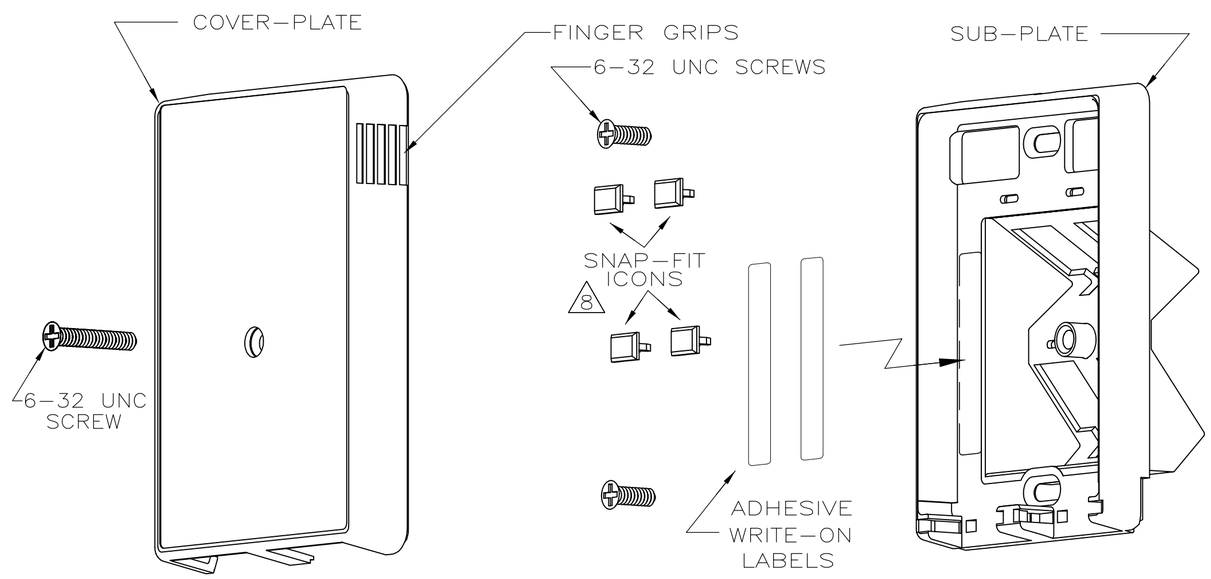

SUB-PLATE COLOR	COVER COLOR	PART NUMBER
LIGHT ALMOND	NEMA GRAY	503997-4
LIGHT ALMOND	WHITE	503997-3
LIGHT ALMOND	BLACK	503997-2
LIGHT ALMOND	LIGHT ALMOND	503997-1

THIS DRAWING IS A CONTROLLED DOCUMENT.

DIMENSIONS: mm [INCHES]

TOLERANCES UNLESS OTHERWISE SPECIFIED:
0 PLC ± -
1 PLC ± -
2 PLC ± -
3 PLC ± -
4 PLC ± -
ANGLES ± -

MATERIAL 2
FINISH 3

DWN J. SABO 19 JUL 95
CHK R. HILEMAN 19 JUL 95
APVD F. ABENDSCHEIN 19 JUL 95
PRODUCT SPEC —
APPLICATION SPEC 408-4164
WEIGHT —

Tyco Electronics
Tyco Electronics Corporation
Harrisburg, PA 17105-3608

NAME
HideOut WALL OUTLET ASSEMBLY,
SCREW-ON COVER, SINGLE GANG,
FIBER/COPPER COMPATIBLE

SIZE	CAGE CODE	DRAWING NO	RESTRICTED TO
A2	00779	C-503997	—

CUSTOMER DRAWING | SCALE NTS | SHEET 1 OF 1 | REV C

503997

1471-9 (1/08)