Sep.1.2020 Copyright 2020 HIROSE ELECTRIC CO., LTD. All Rights Reserved.
In case of consideration for using Automotive equipment / device which demand high reliability, kindly contact our sales window correspondents.

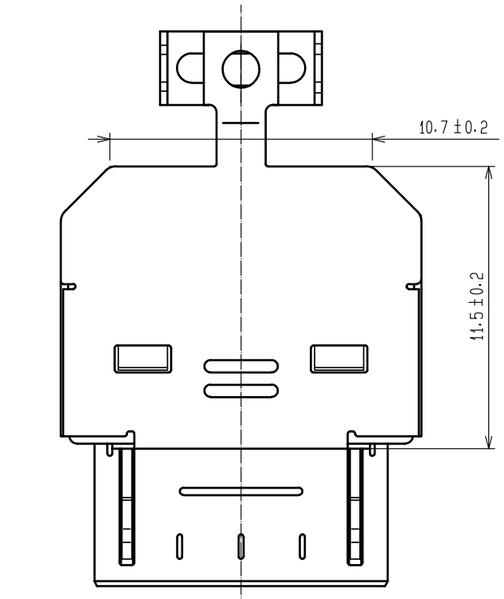

DIRECTON VIEW : A

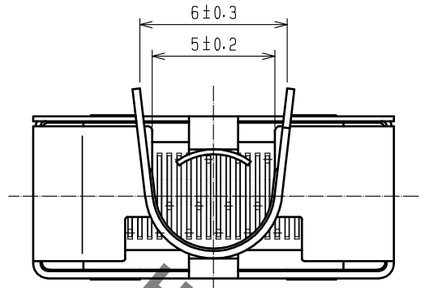

B (10:1)

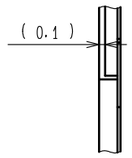

2 DRAWING OF ASSEMBLY WITH PCB

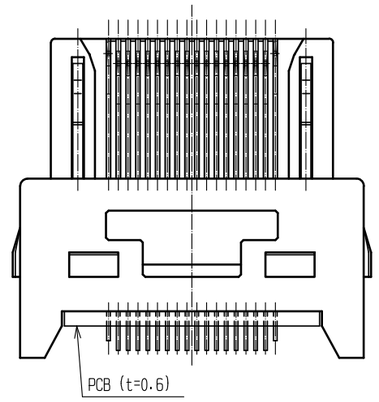

2

REFERENCE PCB LAYOUT FOR HARNESS (t=0.6)
(HARNESS SIDE)

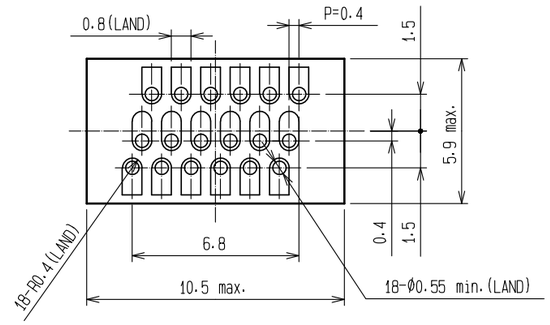

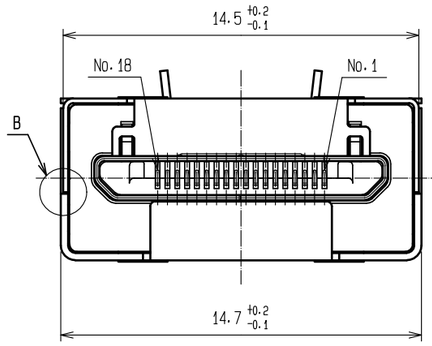

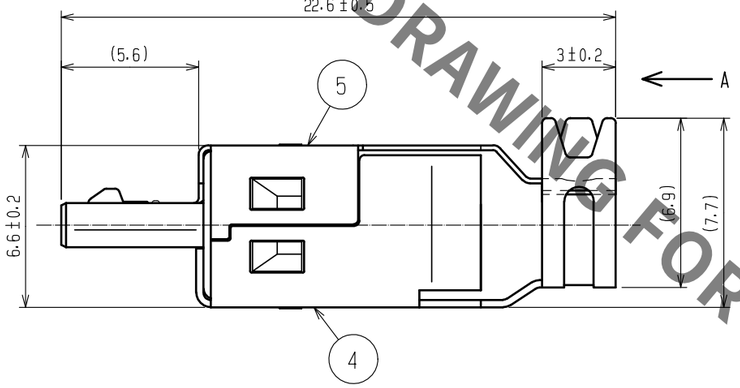

OVERMOLDING IMAGE (1:1)

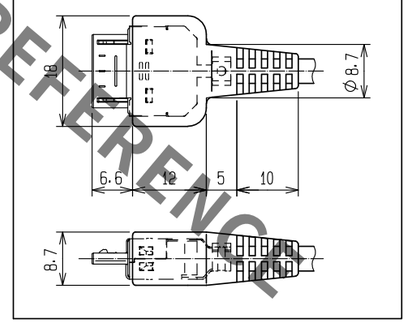

NOTE

1. COMPONENTS OF NO.④ AND ⑤ ARE APPENDED PRODUCTS.
2. PCB SHALL BE USED FOR CABLE WIRE CONNECTION.
   LAND OF PCB FOR CABLE WIRE CONNECTION IS PUT
   IN ONLY HARNESS SIDE.
   IN ADDITION, THE PRODUCT IS NOT ATTACHED THE PCB.
3. APPLICABLE CABLE : Ø4.8±0.1mm
4. WHITE MARK MIGHT REMAIN.
   IT IS LUBERICANT AGENT FOR METAL-PEG AT ASSEBLY.
   THERE IS NO PROBLEM ON THE PERFORMANCE.
5. PLATING
   CONTACT-AREA GOLD 0.2μm min.
   LEAD-AREA GOLD 0.03μm min.
   UNDER-PLATING NICKEL 2μm min.

CONNECTOR UNIT PART

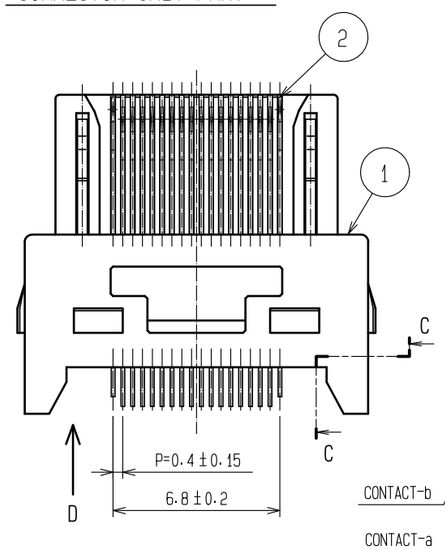

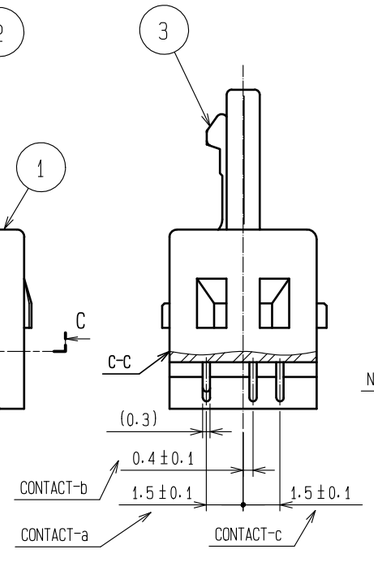

4 DIRECTON VIEW : D 4

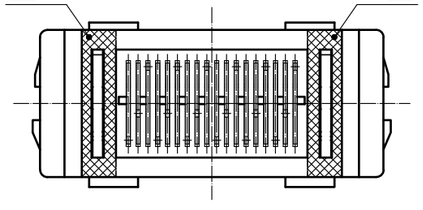

SOLDERING POSITON
DIRECTON VIEW : D

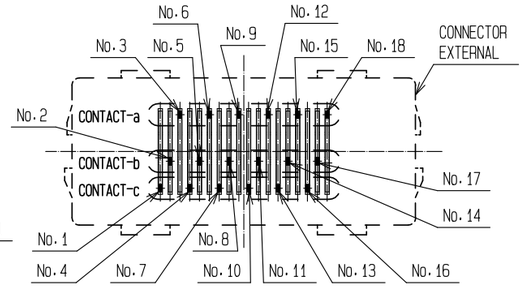

HRS DRAWING FOR REFERENCE

NO.	MATERIAL	FINISH, REMARKS	NO.	MATERIAL	FINISH, REMARKS
			5	STAINLESS STEEL	NICKEL 0.3μm min.
2	COPPER ALLOY	5	4	STAINLESS STEEL	NICKEL 0.3μm min.
1	PA	COLOR:BLACK , UL94V-0	3	STAINLESS STEEL	FLUORINATED LUBRICANT AGENT

UNITS	SCALE	COUNT	DESCRIPTION OF REVISIONS	DESIGNED	CHECKED	DATE
mm	4 : 1	0				

HRS HIROSE ELECTRIC CO., LTD.

APPROVED	: NM. NISHIMATSU	15. 10. 27	DRAWING NO.	EDC-125503-30-00
CHECKED	: KN. ICHIKAWA	15. 10. 27	PART NO.	GX40-18S(30)
DESIGNED	: TS. ITO	15. 10. 27	CODE NO.	CL247-0002-6-30
DRAWN	: AK. AKIYAMA	15. 10. 27		0 1/1

FORM HC0011-5-7