THIS DRAWING IS A CONTROLLED DOCUMENT

DWG NO 901_92X_++

USED ON _

901 - 20 RT 1 - 19 - 0 PN * T *

CONNECTOR TYPE
As per ST 538 AGB/T

SHELL TYPE
20 : Plug
21 : Receptacle with nut and anti rotation teeth
92 : Receptacle with 4 screws
24 : Short receptacle with 4 screws fixing without need for backfitting

FITTING BACK TYPE
Back nut : R
Straight accessory (with adaptor for individual cable) : RT
Elbow accessory (with adaptor for individual cable) : CT
Elbow accessory (for multipurpose cable) : CS
Short elbow accessory (with adaptor for individual cable) : CC
Potting cup for thermo-shrink sleeve : ET
daptor for straight or elbowed light weight cable clamp : RA
Adaptor for heavy duty cable clamp : RD
Accessories for special cables, please consult us

ACCESSORY INDEX AS PER Ø CABLE
(only for accessories RT - CT and CC)

Index	SHELL SIZES 7	12	19	27	37	48	61	121
1	9 to 12,5	12,5 to 14,5	14,5 to 16,5	17 to 19	18,5 to 20,5	20,5 to 25	22 to 24	22 to 24
2	12,5 to 15	14,5 to 19	16,5 to 20	19 to 23	20,5 to 25	25 to 31	24 to 31	24 to 31
3	15 to 16,5	19 to 21	20 to 22	23 to 28	25 to 31	31 to 33,5	31 to 38,5	31 to 38,5

SHELL SIZE
7-12-19-27-37-48-61-121

ARRANGEMENTS
(See pages 8 and 9)

CONTACT TYPE
P : Male contact
S : Female contact

KEYING SYSTEM
N : Normal
W-X-Y-Z : Others
(See page 8)

INDEX FOR CONTACTS
(See pages 24 to 27
size 8 and coax)

THERMO-SHRINK SLEEVE
Supplied with accessory
(for RT - CT - CS - CC and ET indicate index T)

SPECIAL MODIFICATIONS
090 : Connector suppled without contacts, order contacts separately, see pages 24 to 27)

ACCESSORIES

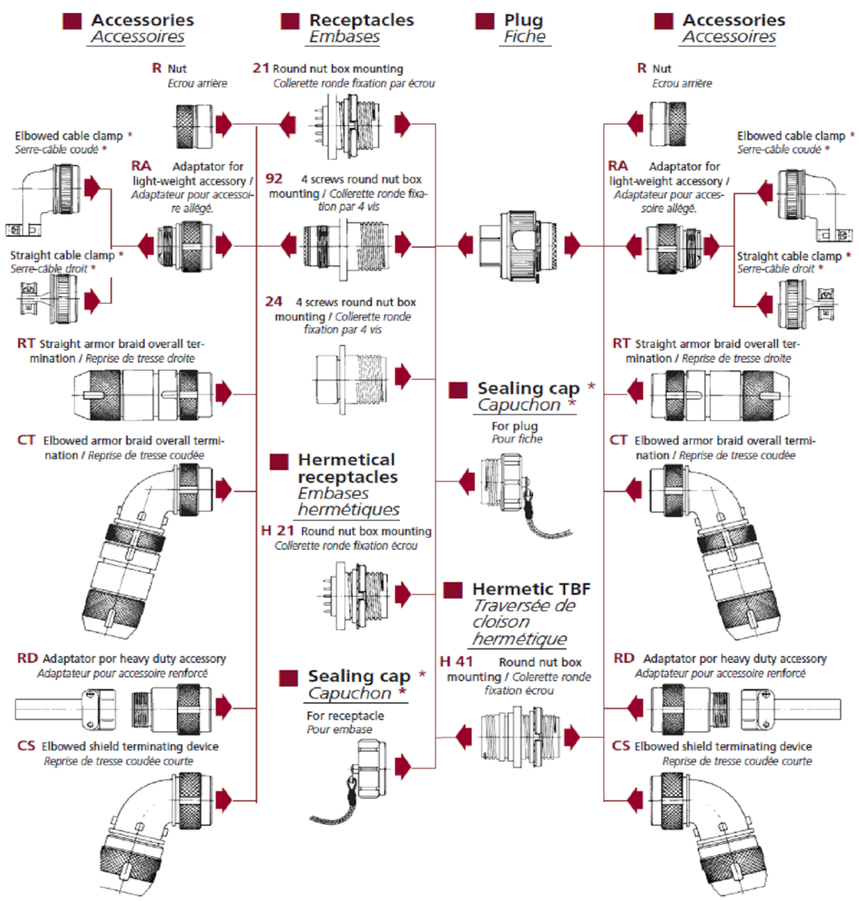

FIXATION PAR 4 VIS
4 HOLE MOUNTING

Type 92 R

PERÇAGE PANNEAU
PANEL HOLE DETAIL

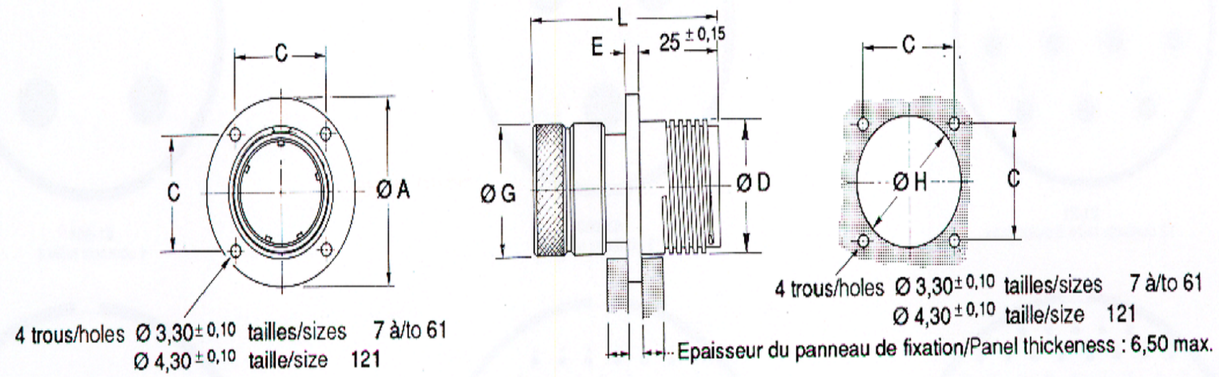

Taille Size	A max.	C ± 0,1	D max.	E max.	G max.	H + 0,2 -- 0	L max.
7	38,00	22,00	24,90	3,15	24,50	27,00	57,10
12	44,00	27,00	28,00	4,15	27,10	31,00	57,10
19	46,00	28,00	31,90	4,15	30,80	35,00	57,10
27	49,00	30,00	35,90	4,15	35,55	38,00	57,35
37	53,00	33,00	38,90	5,15	38,70	42,00	57,35
48	56,00	35,00	42,90	5,15	43,90	45,00	57,35
61	59,00	37,00	45,90	5,15	45,90	48,00	57,35
121	78,00	48,00	56,90	5,15	56,90	63,00	57,35

CHARACTERISTIQUES

1. Shell material : Aluminium alloy, coupling ring , Marine bronze UA9 NFe
2. Insert material : Thermosetting resin, silicone elastomer
3. Contact : Crimp type, gold over nickel
4. Temperature range : - 55° C to + 125° C
5. Withstanding voltage : At sea level
   Service 1 - 1500 V eff. 50 Hz
   Service 2 - 1000 V eff. 50 Hz

THIS INFORMATION IS CONFIDENTIAL AND PROPRIETARY TO TYCO ELECTRONICS CORPORATION AND ITS WORLDWIDE SUBSIDIARIES AND AFFILIATES (TE). IT MAY NOT BE DISCLOSED TO ANYONE, OTHER THAN TE PERSONNEL, WITHOUT AUTHORIZATION FROM TE (www.TE.com).

DIMENSIONS: MM	TOLERANCES UNLESS OTHERWISE SPECIFIED: 0 PLC ±- ; 1 PLC ±-0.05 ; 2 PLC ±-0.05 ; 3 PLC ±-0.02 ; 4 PLC ±-	DWN LAKSHMI SUDHA R	MATERIAL – –
ANGLES ±-°		CHK RAKESH S	HEAT TREAT – –
SURFACE TEXTURE √		APVD VINCENT P	TE Connectivity
		NAME 901 SERIES_Receptacle with 4 screws	
		SCALE 2:1 / SIZE A2 / DRAWING NO 901_92X_++	SHEET 1 OF 1 / REV A

3307-7 (3/13)