HF (13.56 MHz)

BIS M-113-03/L
Order Code: BIS018Y

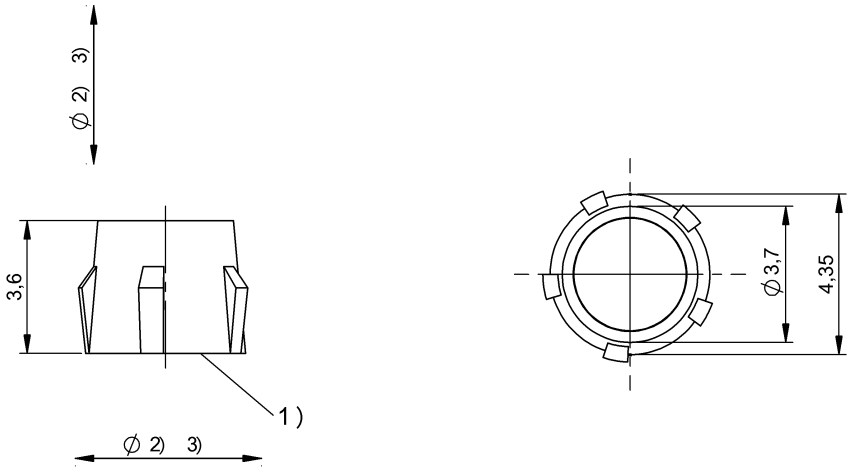

1) Sensing surface, 2) Clear zone, 3) see corresponding R/W head

Basic features

Antenna type	round
Approval/Conformity	CE WEEE
EN 55022	Size 1, Cl. B

Electrical data

Data retention time/years	≥ 50 at 55 °C
Memory organization	28 × 4 bytes
Programming cycles	≤ 100.000
Read cycles	Unlimited

Environmental conditions

Ambient temperature	-40...85 °C
Continuous shock load	yes
EN 60068-2-27, Shock	yes
EN 60068-2-32 Free fall	yes
EN 60068-2-6, Vibration	yes
Protection degree	IPx8
Storage temperature	-40...85 °C

Functional Characteristics

Memory type	EEPROM
Supported data carrier types	DIN ISO 15693
UID serial number, read-only	8 Byte
User data, read/write	112 Byte

Functional safety

MTTF (40 °C)	109 a

Material

Housing material	Epoxy-resin/fiberglass PVC

Mechanical data

Diameter tolerance	±0.05 mm
Dimension	Ø 4.35 x 3.6 mm
Installation	metal-free (clear zone) on metal flush in metal

Remarks

Values are under rated conditions unless otherwise specified.
Only when used together with the appropriate read/write head.
For installation requirements see corresponding read/write head.
Torsional, bending and impact loading is not permitted.
For more information about MTTF and B10d see MTTF / B10d Certificate

Indication of the MTTF- / B10d value does not represent a binding composition and/or life expectancy assurance; these are simply experiential values with no warranty implications. These declared values also do not extend the expiration period for defect claims or affect it in any way.