HF (13.56 MHz)

BIS M-143-02/A-M8
Order Code: BIS00NW

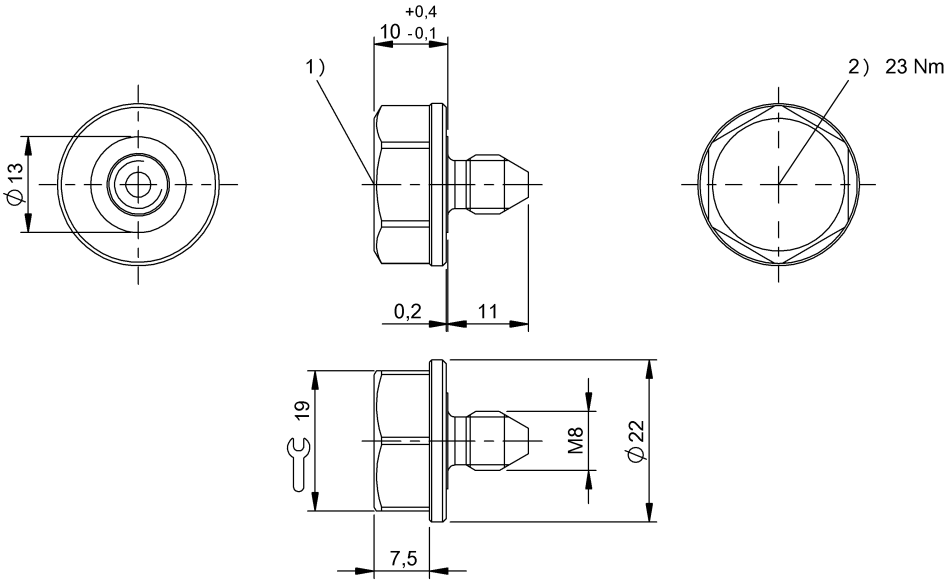

1) Sensing surface, 2) Tightening torque

Basic features

Antenna type	round
Approval/Conformity	CE WEEE
EN 55022	Size 1, Cl. B

Electrical data

Data retention time/years	≥ 10 at 55 °C
Memory organization	250 × 8 bytes
Programming cycles	≥ 10.000.000.000
Programming time	for 16 bytes: 0.060s
Read cycles	Unlimited
Read time	User ID for 8 bytes: 0.02 s for 16 bytes: 0.03 s

Environmental conditions

Ambient temperature	-25...70 °C
Continuous shock load	yes
EN 60068-2-27, Shock	yes
EN 60068-2-32 Free fall	yes
EN 60068-2-6, Vibration	yes
IP rating per DIN 40050	IP68 IPx9K
Protection degree	IP68, IPx9K
Storage temperature	-25...95 °C

Functional Characteristics

Memory type	FRAM
Supported data carrier types	DIN ISO 15693
UID serial number, read-only	8 Byte
User data, read/write	2000 Byte

Functional safety

MTTF (40 °C)	1535 a

Material

Housing material	Steel, Data carrier: PA 12-GF30, coated
Housing material, surface protection	coated

Mechanical data

Application weight	18.00 g
Dimension	Ø 22 x 21 mm
Installation	metal-free (clear zone) on metal flush in metal

Remarks

Time specification includes data check.
We recommend lightly oiling the data carrier screws and storing in a dry location at room temperature.
For installation requirements see corresponding read/write head.
Lubricate screw before installing.
Only when used together with the appropriate read/write head.
Values are under rated conditions unless otherwise specified.
For more information about MTTF and B10d see MTTF / B10d Certificate

Indication of the MTTF- / B10d value does not represent a binding composition and/or life expectancy assurance; these are simply experiential values with no warranty implications. These declared values also do not extend the expiration period for defect claims or affect it in any way.