Mechanical Cam Switches

BNS 819-100-D-11-S80
Order Code: BNS005J

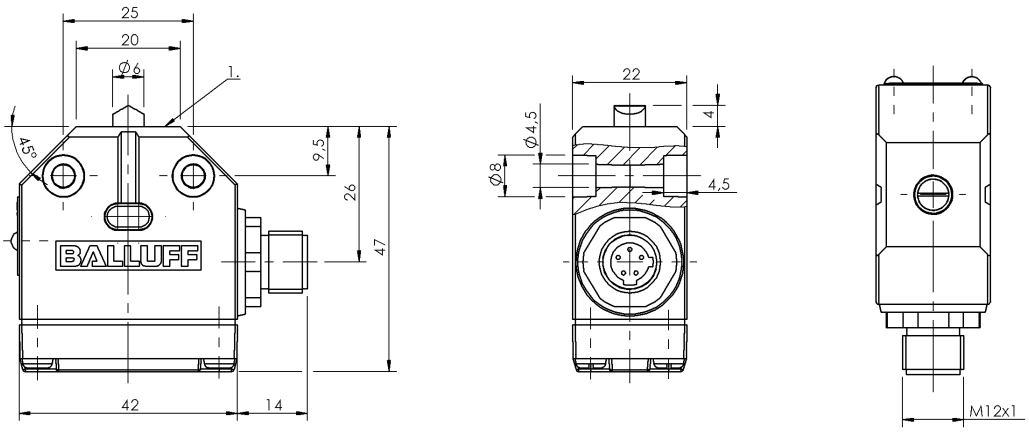

1) Reference edge

Basic features

Approval/Conformity	CE WEEE
Basic standard	IEC 60947-5-1
Operating principle	1. Switch position: Mechanical
Version	Snap contact

Display/Operation

Function indicator	1. Switch position: None

Electrical connection

Connection	M12x1-Flange male, 5-pin
Connection type	1. Switch position: Connector

Electrical data

Connector, order code	BKS-S 80-W-PU-05 (right-angle) BKS-S 80-G-PU-05 (straight)
Continuous current	1. Switch position: 4 A
Rated operating voltage Ue	1. Switch position: 250 V AC
Switching function mechanical	Single-pin changeover
Switching rate	1. Switch position: 200/min

Environmental conditions

Ambient temperature	-5...85 °C
Protection degree	IP67

Functional safety

B10d (EN ISO 13849-1)	BSE 70.1: 10 mil. Switching operations

Material

Housing material	Aluminum, Anodized
Housing material, surface protection	Anodized
Material contacts	1. Switch position: Silver
Plunger material	1. Switch position: Stainless steel (1.4034)

Mechanical data

Approach direction	lateral or at right angles to mounting surface
Approach speed	1. Switch position: 20 m/min
Dimension	42 x 22 x 47 mm
Distance cam - reference edge	1. Switch position: 2.30...2.80 mm
Flange, feed-through	None
Installation	any
Life expectancy mechanical	1. Switch position: 10 million Switching operations
Number of switching positions	1x Chisel
Plunger spacing 1st switch position	11 mm
Plunger style	1st switch position: Chisel
Switch actuation force	1. Switch position: 8 N
Switching element	1. Switch position: BSE 70.1

Range/Distance

Reproducibility	1. Switch position: ±0.02 mm

Connector Drawings

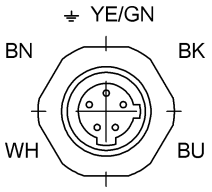

View of connector side
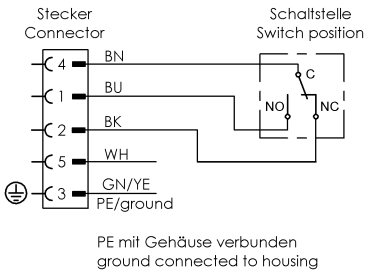
Wiring Diagrams