Mechanical Cam Switches

# BNS 819-D04-D12-62-10
# Order Code: BNS01JP

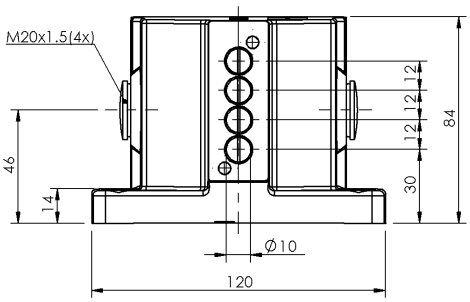


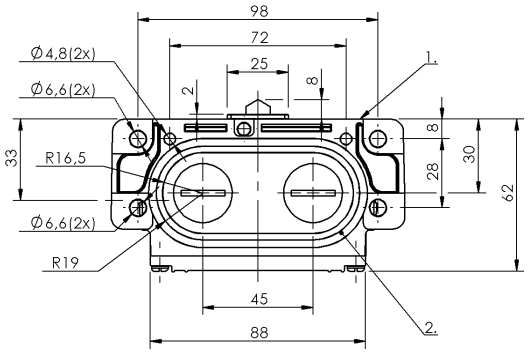


1) Reference edge, 2) Sealing ring

## Basic features

| | |
|---|---|
| **Approval/Conformity** | CE<br>CCC<br>WEEE |
| **Basic standard** | IEC 60947-5-1 |
| **Operating principle** | 1-4. Switch position: Mechanical |
| **Version** | Snap contact |

## Display/Operation

| | |
|---|---|
| **Function indicator** | 1-4. Switch position: None |

## Electrical connection

| | |
|---|---|
| **Connection type** | 1-4. Switch position: Screw terminal |

## Electrical data

| | |
|---|---|
| **Continuous current** | 1-4. Switch position: 6 A |
| **Rated operating voltage Ue** | 1-4. Switch position: 250 V AC |
| **Switching function mechanical** | galvanically isolated<br>One NO and one NC<br>Dual changeover<br>Double-interrupting |
| **Switching rate** | 1-4. Switch position: 300/min |

## Environmental conditions

| | |
|---|---|
| **Ambient temperature** | -5...85 °C |
| **Protection degree** | IP67 |

## Functional safety

| | |
|---|---|
| **B10d (EN ISO 13849-1)** | BSE 30.0: 30 mil. Switching operations |

## Material

| | |
|---|---|
| **Housing material** | Aluminum, Anodized |
| **Housing material, surface protection** | Anodized |
| **Material contacts** | 1-4. Switch position: Silver, gold plated |
| **Plunger material** | 1-4. Switch position: Stainless steel (1.4034) |

## Mechanical data

| | |
|---|---|
| **Approach direction** | longitudinal, parallel to attachment surface |
| **Approach speed** | 1-4. Switch position: 40 m/min |
| **Dimension** | 120 x 84 x 64 mm |
| **Distance cam - reference edge** | 1-4. Switch position: 4.50...5.00 mm |
| **Flange, feed-through** | 2 threaded exit M20 |
| **Installation** | Vertical |
| **Life expectancy mechanical** | 1-4. Switch position: 30 million Switching operations |
| **Number of switching positions** | 4x Chisel |
| **Plunger spacing 1st switch position** | 30 mm |
| **Plunger style** | 1-4th switch position: Chisel |
| **Switch actuation force** | 1-4. Switch position: 20 N |
| **Switching element** | 1-4. Switch position: BSE 30.0 |

## Range/Distance

| | |
|---|---|
| **Reproducibility** | 1-4. Switch position: ±0.002 mm |
| **Switch position spacing** | 12 mm |

## Wiring Diagrams
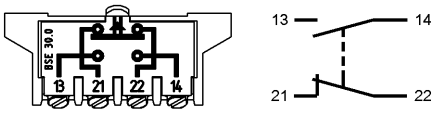
BSE 30.0