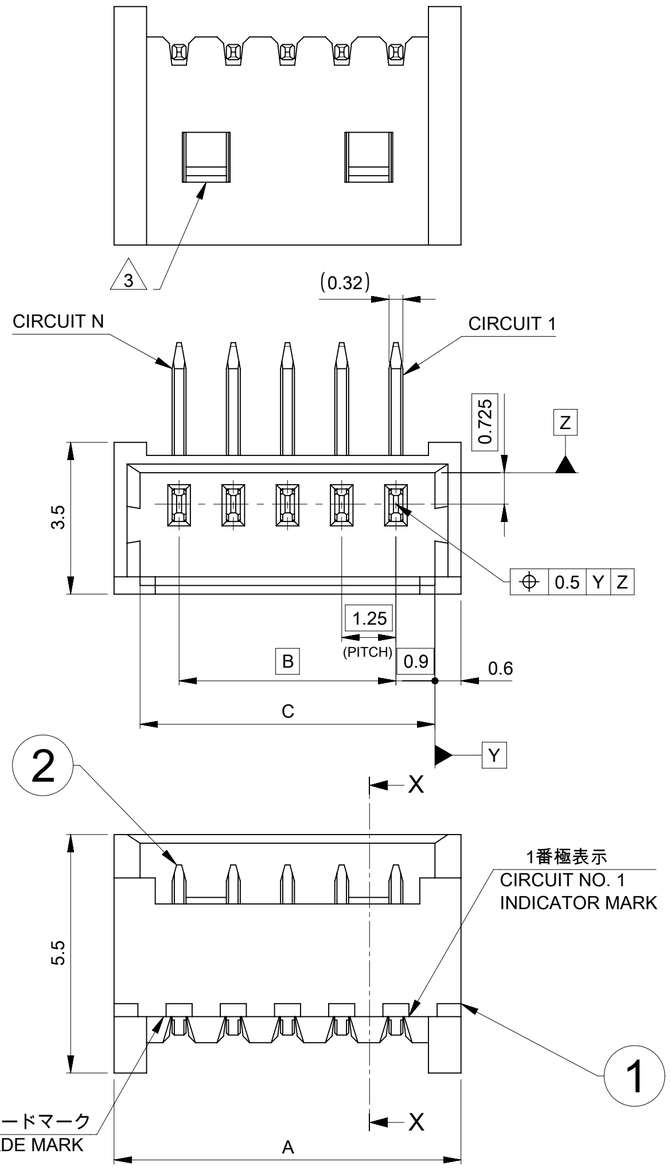


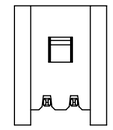

2, 3極形状 (1ロック)
FIGURE OF 2, 3 CIRCUIT (1 LOCK)

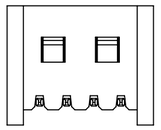

4~15極形状 (2ロック)
FIGURE OF 4-15 CIRCUIT (2 LOCKS)

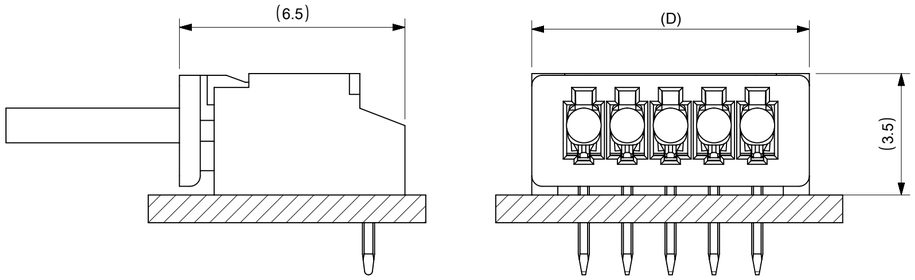


1 嵌合図
MATED CONNECTORES

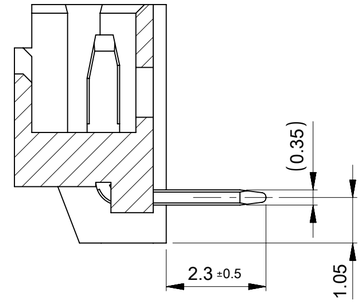


SECTION X-X

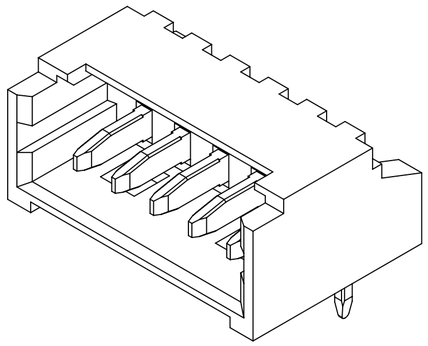

注記 NOTES

1. 材料及び仕上げ（めっき仕様）：TABLE 1参照
   MATERIAL AND FINISHES: SEE TABLE 1
2. 適合製品及び各種仕様書はSHEET 2をご参考ください。
   PLEASE REFER TO SHEET 2 FOR APPLICABLE PRODUCTS AND VARIOUS SPECIFICATIONS.
3. ロック窓 LOCKING WINDOW:
   ロック窓は、2、3極では1ヶ所、4極以上では2ヶ所とする。
   ONE PLACE FOR 2 AND 3 CIRCUIT.
   TWO PLACES FOR 4 CIRCUIT AND MORE.
4. 本製品はすずめっき品です。金めっき品は530480000-SDをご参照ください。
   THIS PRODUCT IS TIN PLATING TYPE.
   PLEASE REFER TO 530480000-SD FOR GOLD PLATING TYPE.
5. 発注番号
   ORDER NO. 53048**10
   極数 CIRCUIT

| D | C | B | A | 5 オーダー番号 ORDER NO. / 梱包形態：トレイ梱包 PACKAGING: PLASTIC TRAY | 極数 CIRCUIT |
|---|---|---|---|---|---|
| 20.5 | 19.3 | 17.5 | 20.5 | 530481510 | 15 |
| 19.25 | 18.05 | 16.25 | 19.25 | 530481410 | 14 |
| 18 | 16.8 | 15 | 18 | 530481310 | 13 |
| 16.75 | 15.55 | 13.75 | 16.75 | 530481210 | 12 |
| 15.5 | 14.3 | 12.5 | 15.5 | 530481110 | 11 |
| 14.25 | 13.05 | 11.25 | 14.25 | 530481010 | 10 |
| 13 | 11.8 | 10 | 13 | 530480910 | 9 |
| 11.75 | 10.55 | 8.75 | 11.75 | 530480810 | 8 |
| 10.5 | 9.3 | 7.5 | 10.5 | 530480710 | 7 |
| 9.25 | 8.05 | 6.25 | 9.25 | 530480610 | 6 |
| 8 | 6.8 | 5 | 8 | 530480510 | 5 |
| 6.75 | 5.55 | 3.75 | 6.75 | 530480410 | 4 |
| 5.5 | 4.3 | 2.5 | 5.5 | 530480310 | 3 |
| 4.25 | 3.05 | 1.25 | 4.25 | 530480210 | 2 |

(公差非累積)
(NON-ACCUMULATE)

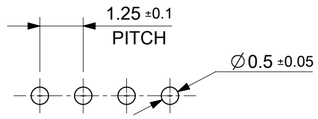


基板取付穴推奨寸法 (t=0.8)
RECOMMENDED PCB HOLE DIMENSION (t=0.8)

## 1 TABLE1

| 番号 NO. | 部品 PART | 材質 MATERIAL | |
|---|---|---|---|
| 1 | ハウジング HOUSING | ポリアミド(PA), UL94V-0, 色：ナチュラル (ホワイト) POLYAMIDE(PA), UL94V-0, COLOR：NATURAL (WHITE) | |
| 2 | ターミナル TERMINAL | 母材 MATERIAL | りん青銅 PHOSPHOR BRONZE |
| | | コンタクト部 CONTACT AREA | 無光沢錫めっき 0.9 MICRO-METER MIN. (リフロー処理、前めっき) |
| | | テール部 TAIL AREA | MATTE TIN PLATING 0.9 MICRO-METER MIN. (REFLOW TREATMENT, PRE-PLATING) |

DOCUMENT STATUS | P1 | RELEASE DATE | 2022/04/19 08:41:23

THIS DRAWING CONTAINS INFORMATION THAT IS PROPRIETARY TO MOLEX ELECTRONIC TECHNOLOGIES, LLC AND SHOULD NOT BE USED WITHOUT WRITTEN PERMISSION

| DIMENSION UNITS | SCALE |
|---|---|
| mm | NTS |

GENERAL TOLERANCES (UNLESS SPECIFIED)

| | | |
|---|---|---|
| ANGULAR TOL | ± | 3.0 ° |
| 4 PLACES | ± | 0.2 |
| 3 PLACES | ± | 0.2 |
| 2 PLACES | ± | 0.2 |
| 1 PLACE | ± | 0.2 |
| 0 PLACES | ± | 0.2 |

DRAFT WHERE APPLICABLE MUST REMAIN WITHIN DIMENSIONS

CURRENT REV DESC: REVISED

EC NO: 698818
DRWN: HHUSSIN 2022/02/16
CHK'D: SAKIYAMA 2022/04/19
APPR: AIDA 2022/04/19

INITIAL REVISION:
DRWN: SOBARA01 2019/09/26
APPR: AIDA 2019/10/15

molex

PICOBLADE 1.25
HEADER ASSY DIP R/A TIN PLATING TYPE

PRODUCT CUSTOMER DRAWING

| DOCUMENT NUMBER | DOC TYPE | DOC PART | REVISION |
|---|---|---|---|
| 530480001-SD | PSD | 000 | B |

| THIRD ANGLE PROJECTION | DRAWING | SERIES | MATERIAL NUMBER | CUSTOMER | SHEET NUMBER |
|---|---|---|---|---|---|
| | A2-SIZE | 53048 | SEE CHART | GENERAL | 1 OF 2 |

## △2 適合製品及び各種仕様書
## APPLICABLE PRODUCTS AND SPECIFICATIONS

| 梱包仕様書<br>PACKING SPECIFICATION | PART NUMBER | SPECIFICATION NUMBER |
|---|---|---|
| | 53048**10 | SPK-53048-001 |

| 適合ハウジング<br>APPLICABLE HOUSING | PART NUMBER |
|---|---|
| | 51021**00 |

| 適合圧着端子<br>APPLICABLE TERMINAL | | | | | |
|---|---|---|---|---|---|
| | PLATING | TIN | | | |
| | PART NUMBER | 500798*00 | 500588*00 | 500798001 | 500588001 |
| | WIRE SIZE (AWG) | #26-28 | #28-32 | #26-28 | #28-32 |

| | | |
|---|---|---|
| 製品仕様書<br>PRODUCT SPECIFICATION | PS-51021-010 PS 001 | 510211111-PS PS 000 |
| アプリケーション仕様書 (取扱説明書)<br>APPLICATION SPECIFICATION | 510210000-AS PS 000 | |

THIS DRAWING CONTAINS INFORMATION THAT IS PROPRIETARY TO MOLEX ELECTRONIC TECHNOLOGIES, LLC AND SHOULD NOT BE USED WITHOUT WRITTEN PERMISSION

| DIMENSION UNITS | SCALE |
|---|---|
| mm | NTS |

GENERAL TOLERANCES (UNLESS SPECIFIED)

| | | |
|---|---|---|
| ANGULAR TOL | ± | 3.0 ° |
| 4 PLACES | ± | 0.2 |
| 3 PLACES | ± | 0.2 |
| 2 PLACES | ± | 0.2 |
| 1 PLACE | ± | 0.2 |
| 0 PLACES | ± | 0.2 |

DRAFT WHERE APPLICABLE MUST REMAIN WITHIN DIMENSIONS

CURRENT REV DESC: REVISED

EC NO: 698818
DRWN: HHUSSIN 2022/02/16
CHK'D: SAKIYAMA 2022/04/19
APPR: AIDA 2022/04/19

INITIAL REVISION:
DRWN: SOBARA01 2019/09/26
APPR: AIDA 2019/10/15

molex

PICOBLADE 1.25
HEADER ASSY DIP R/A TIN PLATING TYPE

PRODUCT CUSTOMER DRAWING

| DOCUMENT NUMBER | DOC TYPE | DOC PART | REVISION |
|---|---|---|---|
| 530480001-SD | PSD | 000 | B |

| THIRD ANGLE PROJECTION | DRAWING | SERIES | MATERIAL NUMBER | CUSTOMER | SHEET NUMBER |
|---|---|---|---|---|---|
| | A2-SIZE | 53048 | SEE CHART | GENERAL | 2 OF 2 |

| DOCUMENT STATUS | P1 | RELEASE DATE | 2022/04/19 08:41:23 |
|---|---|---|---|