78962

NOTES:
1. CARD SLOT ACCEPTS .050 +.004/-.003 P.C. BOARDS(MEASURED OVER P.C. PADS).
2. PRODUCT SPEC PS-78954 APPLIES
3. CENTER PEG IS AN INTERFERENCE FIT TO PCB UNLESS NOTED ON THE DWG. (APPLICABLE ONLY IF PART HAS A CENTER PEG FEATURE)

MATERIALS:
HOUSING- LCP, GLASS FILLED, 94V-0, COLOR: GRAY
TERMINAL- PHOSPHOR BRONZE
PLATING- POST PLATED 30 μin/(0.76 μm) MINIMUM GOLD IN CONTACT AREA AND 150 μin/(3.81μm) MINIMUM TIN IN TAIL AREA OVER 75 μin/(1.91μm) MINIMUM NICKEL OVERALL.
* REFERENCE NOTE IN LOWER LEFT CORNER OF DRAWING.
METAL LATCH- STAINLESS STEEL

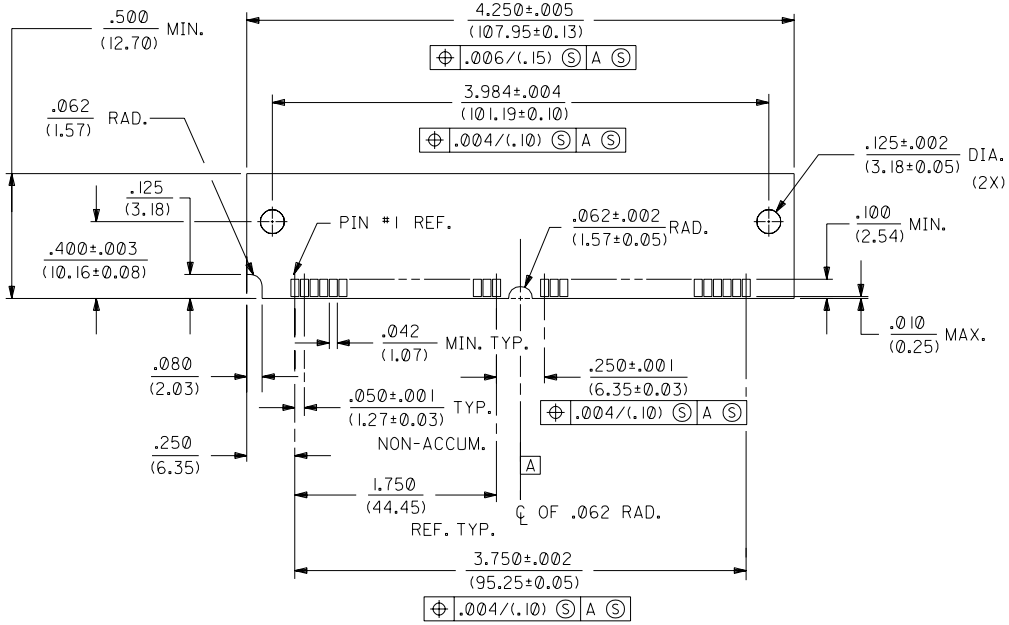

"SIMM" P.C. BOARD LAYOUT

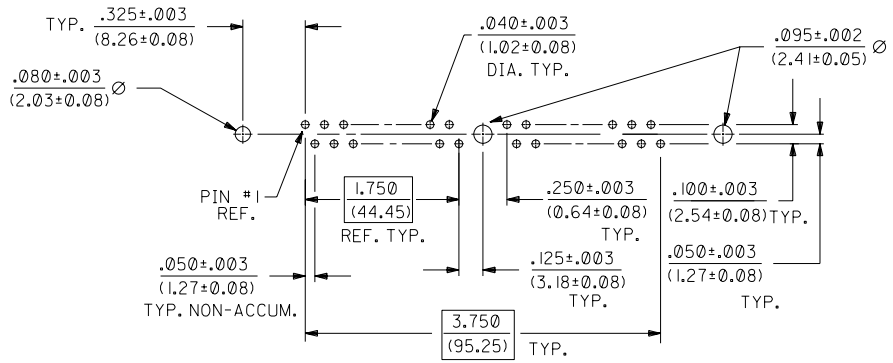

RECOMMENDED SOCKET
P.C. BOARD HOLE PATTERN

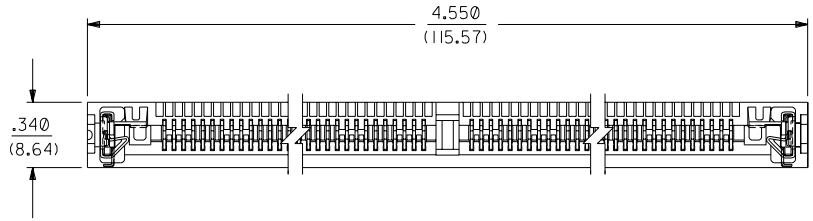

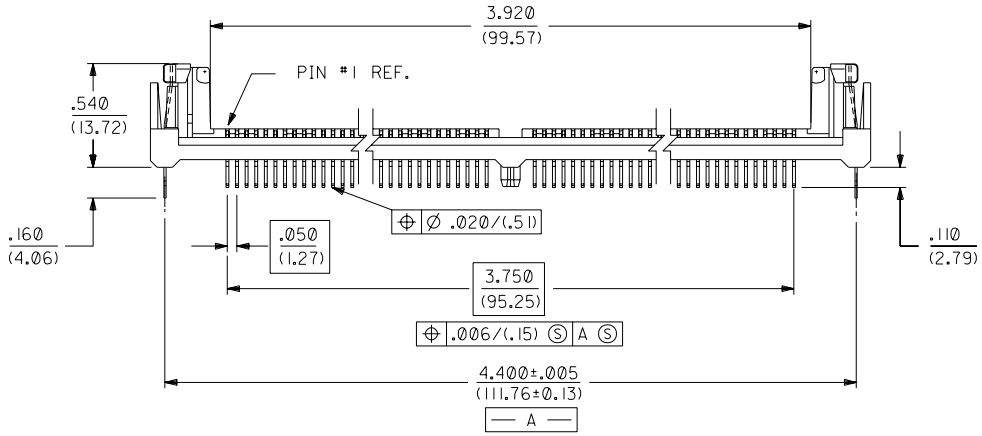

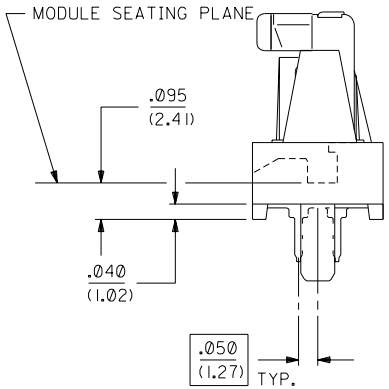

END VIEW
SCALE 4:1

*THE PRIMARY SHIPPING CARTON WILL BE LABELED "COMPLIANT TO RoHS DIRECTIVE 2002/95/EC AND ELV ANNEX II OF DIRECTIVE 2000/53/EC" CARTONS WITHOUT THIS LABEL MAY CONTAIN PRODUCT WITH LEAD.

LTR.	REVISIONS
F	LEAD FREE UCP2004-1582 RWHITE 04/02/24
E	REVISED PER ECN# U51309 GMY 8-18-95
D	ADD MISSING CTR. PEG ECN#U31699 MJS 11-16-93
C	REDRAWN PER ECR U20649 AMD 6-9-92
B	CORRECTED CTR PEG PER ECN U10221 SEC 3 JAN 91
A	RELEASE FOR MFG. PER ERO 30407 SEC 9-18-90

MFG. SH. REV.

REVISE ONLY ON CAD SYSTEM

DIMENSIONS SHOWN (METRIC) INCH

UNLESS OTHERWISE SPECIFIED TOLERANCES: ANGULAR ± 1/2°

	INCH	METRIC
3 PLACE	± .010	---
2 PLACE	± .014	± 0.25
1 PLACE	---	± .035

DRAFT WHERE APPLICABLE MUST REMAIN WITHIN DIMENSIONS

TITLE
SALES ASSEMBLY
LOW KEY METAL LATCH
VERTICAL SIMM SOCKET

molex MOLEX INCORPORATED
LISLE, ILL. 60532 U.S.A.

SHEET NO. 1
DATE 09/18/90

PART NO. 15-82-0774
DRWG. NO. SDA-78962-7212

DRWG. BY SEC
CHK'D. BY
APP'D. BY
SCALE 2 : 1

FILE NAME S7896253 DGN

THIS DRAWING CONTAINS INFORMATION THAT IS PROPRIETARY TO MOLEX INC. AND SHOULD NOT BE USED WITHOUT WRITTEN PERMISSION.

DIV. DA
SIZE C

78962