78962

NOTES:
1. CARD SLOT ACCEPTS .050 +.004/-.003 P.C. BOARDS(MEASURED OVER P.C. PADS).
2. PRODUCT SPEC PS-78954 APPLIES
3. CENTER PEG IS AN INTERFERENCE FIT TO PCB UNLESS NOTED ON THE DWG. (APPLICABLE ONLY IF PART HAS A CENTER PEG FEATURE)

MATERIALS:
HOUSING- LCP, GLASS FILLED, 94V-0, COLOR: BLACK
TERMINAL- PHOSPHOR BRONZE
PLATING- POST PLATED 200 µin/(5.08 µm) MINIMUM TIN IN CONTACT AREA AND 150 µin/(3.81µm) MINIMUM TIN IN TAIL AREA OVER 50 µin/(1.27 µm) MINIMUM NICKEL OVERALL
* REFERENCE NOTE IN LOWER LEFT CORNER OF DRAWING.
METAL LATCH- STAINLESS STEEL

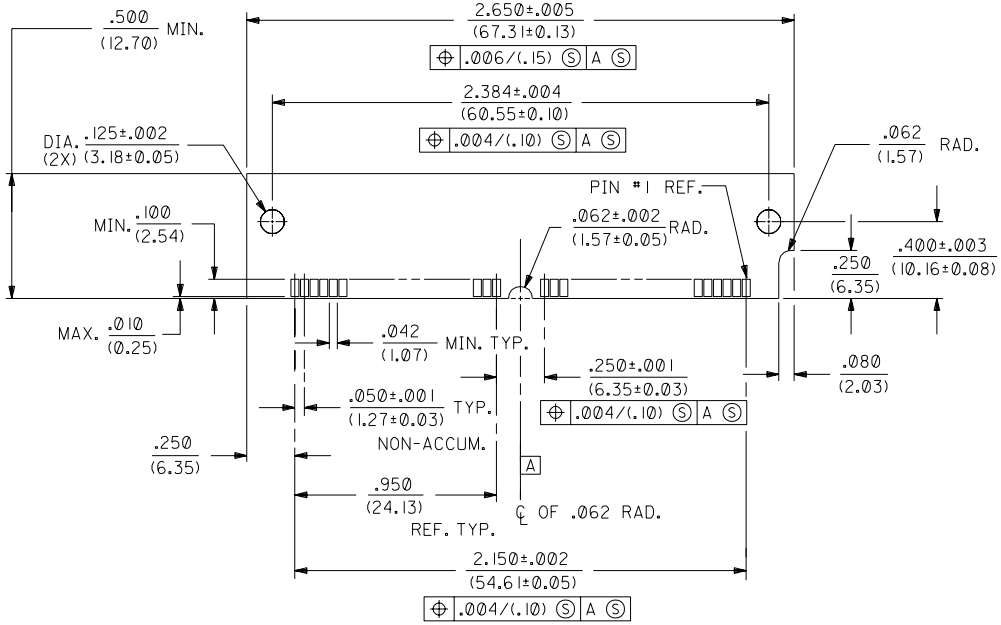

"SIMM" P.C. BOARD LAYOUT

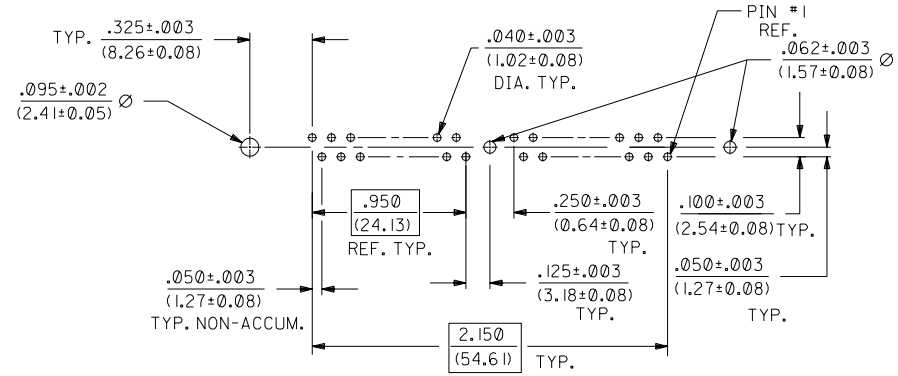

RECOMMENDED SOCKET
P.C. BOARD HOLE PATTERN

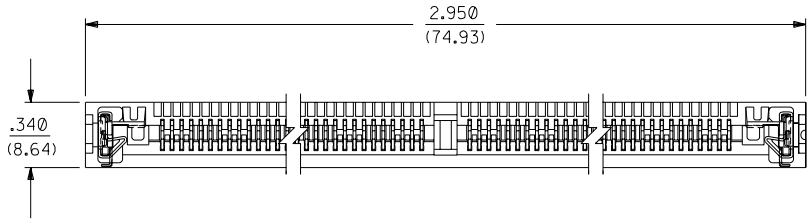

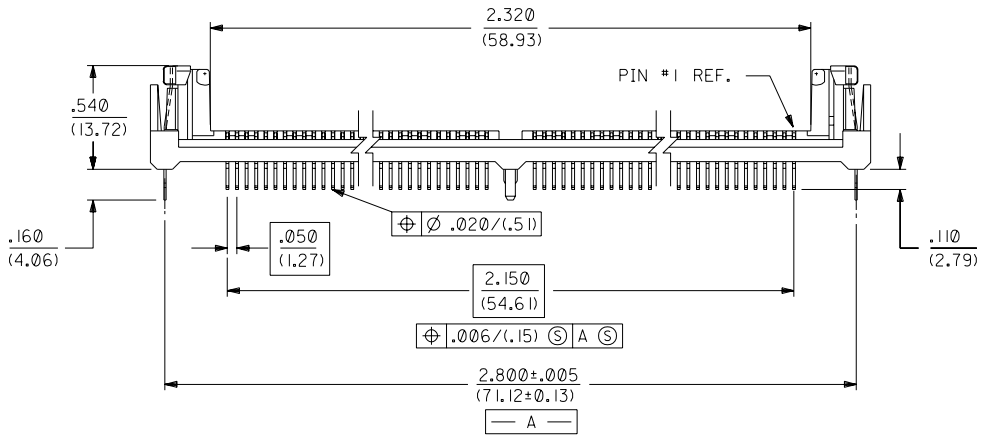

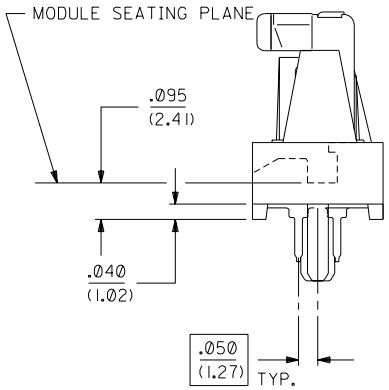

END VIEW
SCALE 4:1

*THE PRIMARY SHIPPING CARTON WILL BE LABELED "COMPLIANT TO RoHS DIRECTIVE 2002/95/EC AND ELV ANNEX II OF DIRECTIVE 2000/53/EC" CARTONS WITHOUT THIS LABEL MAY CONTAIN PRODUCT WITH LEAD.

MFG.	SH.	REV.	LTR.	REVISIONS
			C	LEAD FREE UCP2004-1582 RWHITE 04/02/24
			B	REVISED PER ECN# U51309 GMY 8-17-95
			A	ADDED EDP NO. PER ECN U50637 GMY 2-27-95
			2	REDRAWN PER ECR U20649 AMD 4-30-92
			1	X-RELEASE PER ECN U1 0427 SEC 8 FEB 91

DIMENSIONS SHOWN (METRIC) INCH
UNLESS OTHERWISE SPECIFIED TOLERANCES: ANGULAR ± 1/2°

	INCH	METRIC
3 PLACE	± .010	---
2 PLACE	± .014	± 0.25
1 PLACE	---	± .035

DRAFT WHERE APPLICABLE MUST REMAIN WITHIN DIMENSIONS

DRWG. BY SEC | CHK'D. BY
APP'D. BY GWF | SCALE 2 : 1

= 0 = 0 REVISE ONLY ON CAD SYSTEM

TITLE
SALES ASSEMBLY 40 CIRCUIT REVERSE ROTATION, VERTICAL METAL LATCH SIMM SOCKET

molex MOLEX INCORPORATED LISLE, ILL. 60532 U.S.A.
SHEET NO. 1 | DATE 02/08/91
PART NO. 15-82-1181 | DRWG. NO. SDA-78962-4035
FILE NAME S78962267 DGN

THIS DRAWING CONTAINS INFORMATION THAT IS PROPRIETARY TO MOLEX INC. AND SHOULD NOT BE USED WITHOUT WRITTEN PERMISSION.

DIV. DA | SIZE C

78962