78968

THROUGH HOLE

SHEET #	MODULE HEIGHT	LATCH	ROTATION	PCB PATTERN
2	.125	PLASTIC	STANDARD(LEFT)	PATTERN 1
3	.125	PLASTIC	REVERSE(RIGHT)	PATTERN 3
4	.160	PLASTIC	STANDARD(LEFT)	PATTERN 1
5	.160	PLASTIC	STANDARD(LEFT)	PATTERN 2
6	.160	PLASTIC	REVERSE(RIGHT)	PATTERN 3
7	.160	METAL	STANDARD(LEFT)	PATTERN 1
8	.160	METAL	STANDARD(LEFT)	PATTERN 2
9	.160	METAL	REVERSE(RIGHT)	PATTERN 3
10	.190	PLASTIC	STANDARD(LEFT)	PATTERN 1
11	.190	PLASTIC	STANDARD(LEFT)	PATTERN 2
12	.190	PLASTIC	REVERSE(RIGHT)	PATTERN 3
13	.190	METAL	STANDARD(LEFT)	PATTERN 1
14	.190	METAL	STANDARD(LEFT)	PATTERN 2
15	.190	METAL	REVERSE(RIGHT)	PATTERN 3
16	.250	PLASTIC	STANDARD(LEFT)	PATTERN 1
17	.250	PLASTIC	STANDARD(LEFT)	PATTERN 2
18	.250	PLASTIC	REVERSE(RIGHT)	PATTERN 3
19	.250	METAL	STANDARD(LEFT)	PATTERN 1
20	.250	METAL	STANDARD(LEFT)	PATTERN 2
21	.250	METAL	REVERSE(RIGHT)	PATTERN 3
22	.290	PLASTIC	STANDARD(LEFT)	PATTERN 1
23	.290	PLASTIC	STANDARD(LEFT)	PATTERN 2
24	.290	PLASTIC	REVERSE(RIGHT)	PATTERN 3
25	.290	METAL	STANDARD(LEFT)	PATTERN 1
26	.290	METAL	STANDARD(LEFT)	PATTERN 2
27	.290	METAL	REVERSE(RIGHT)	PATTERN 3

SURFACE MOUNT

SHEET #	MODULE HEIGHT	LATCH	ROTATION	PCB PATTERN
28	.160	METAL	STANDARD(LEFT)	PATTERN 4
29	.160	METAL	REVERSE(RIGHT)	PATTERN 5
30	.190	METAL	STANDARD(LEFT)	PATTERN 4
31	.190	METAL	REVERSE(RIGHT)	PATTERN 5
32	.250	METAL	STANDARD(LEFT)	PATTERN 4
33	.250	METAL	REVERSE(RIGHT)	PATTERN 5
34	.290	METAL	STANDARD(LEFT)	PATTERN 4
35	.290	METAL	REVERSE(RIGHT)	PATTERN 5

THROUGH HOLE PATTERNS

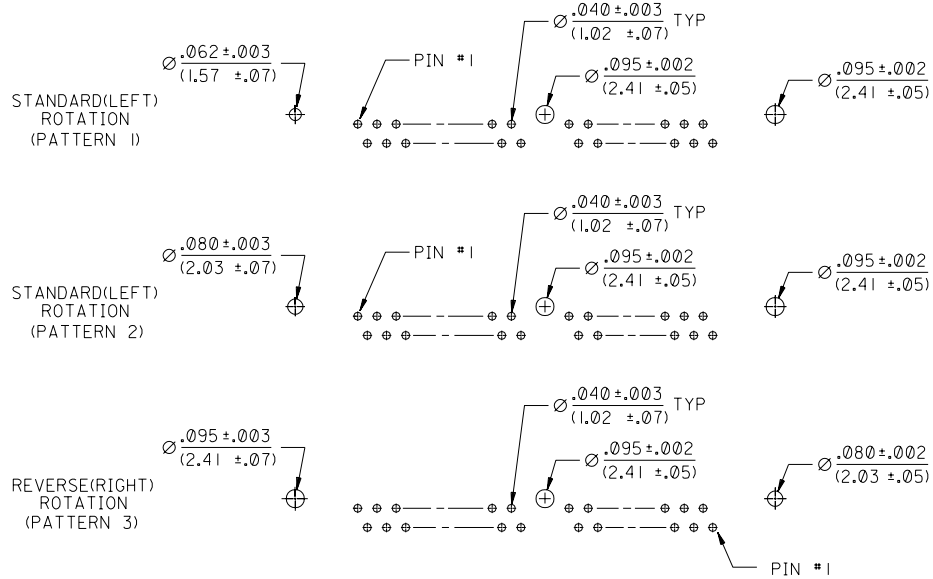

SURFACE MOUNT PATTERNS

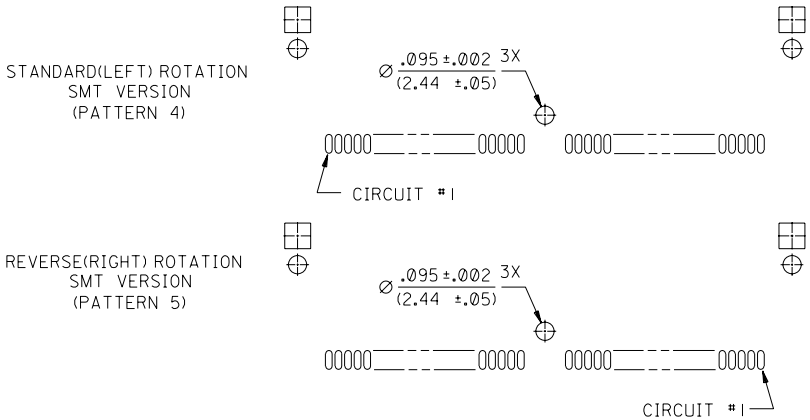

P.C. BOARD HOLE PATTERNS

MFG.	SH.	REV.	LTR.	REVISIONS
	35	D		
	34	D		
	33	D		
	32	D		
	31	D		
	30	D		
	29	D		
	28	D		
	27	D		
	26	D		
	25	D		
	24	D		
	23	D		
	22	D		
	21	D		
	20	D		
	19	D		
	18	D		
	17	D		
	16	D		
	15	D		
	14	D		
	13	D		
	12	D		
	11	D		
	10	D	D	LEAD FREE UCP2004-1582 RWHITE 04/03/04
	9	D		
	8	D	C1	VOID CKT SIZES ECN #UDT1999-0200 DMORGAN 98/10/07
	7	D		
	6	D	C	CHANGED -8403 PER ECN#U81132 SPIEWAK 97/11/15
	5	D		
	4	D	B	REVISED PER ECN U50613 GMY 12-22-94
	3	D		
	2	D	A	RELEASED PER ECR U31660 AMD 11/11/93
	1	D		

DIMENSIONS SHOWN (METRIC) INCH

UNLESS OTHERWISE SPECIFIED TOLERANCES: ANGULAR ± 1/2°

	INCH	METRIC
3 PLACE	± .01	---
2 PLACE	± .014	± 0.25
1 PLACE	---	± 0.36

DRAFT WHERE APPLICABLE MUST REMAIN WITHIN DIMENSIONS

DRWG. BY AMD | CHK'D. BY | APP'D. BY | SCALE 2 : 1

▽ = 0 ▼ = 0 REVISE ONLY ON CAD SYSTEM

TITLE
SALES ASSEMBLY
.05 PITCH RIGHT ANGLE
SIMM SOCKET FAMILY

molex MOLEX INCORPORATED LISLE,ILL. 60532 U.S.A.

SHEET NO. 1 OF 35 | DATE 11/11/93

PART NO. SEE CHART | DRWG. NO. SDA-78968-****

FILE NAME SD78968001 DGN

THIS DRAWING CONTAINS INFORMATION THAT IS PROPRIETARY TO MOLEX INC. AND SHOULD NOT BE USED WITHOUT WRITTEN PERMISSION.

DIV. DA | SIZE C

78968

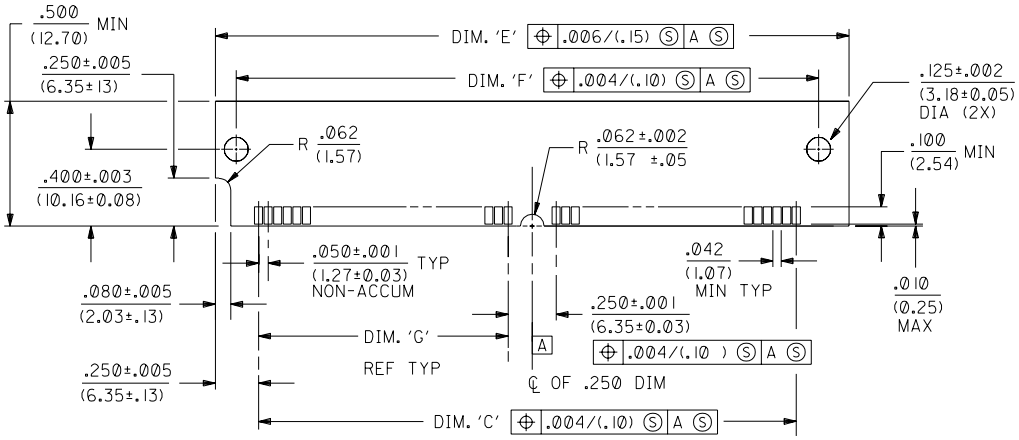

"SIMM" P.C. BOARD LAYOUT

NOTES:
1. CARD SLOT ACCEPTS .050 +.004/-.003 P.C. BOARDS (MEASURED OVER P.C. PADS).
2. CENTER PEG IS AN INTERFERENCE FIT TO RECOMMENDED P.C. BOARD HOLE. (WHERE APPLICABLE)
3. PRODUCT SPEC PS-78968 APPLIES

MATERIALS:
HOUSING- LCP , GLASS FILLED, 94V-0, COLOR: BLACK.
TERMINAL- PHOSPHOR BRONZE

PLATING - SEE CHART
*THE PRIMARY SHIPPING CARTON WILL BE LABELED "COMPLIANT TO RoHS DIRECTIVE 2002/95/EC AND ELV ANNEX II OF DIRECTIVE 2000/53/EC". CARTONS WITHOUT THIS LABEL MAY CONTAIN PRODUCT WITH LEAD.

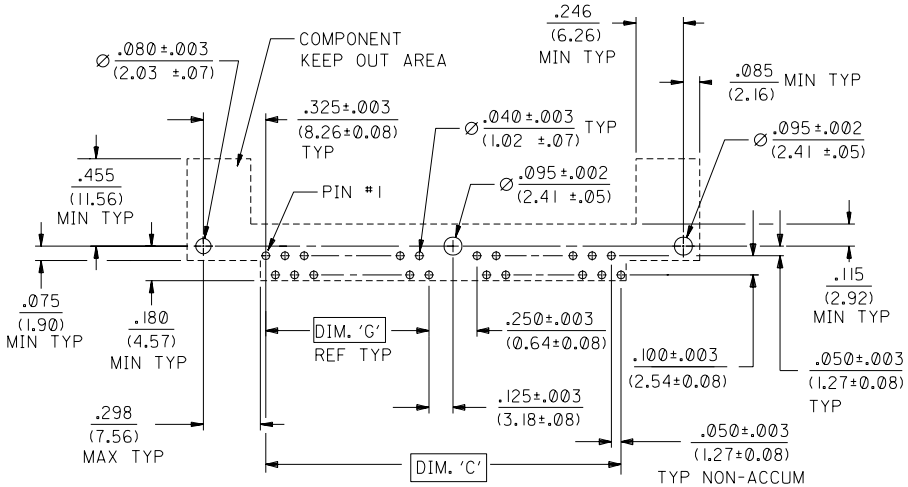

RECOMMENDED SOCKET
P.C. BOARD HOLE PATTERN

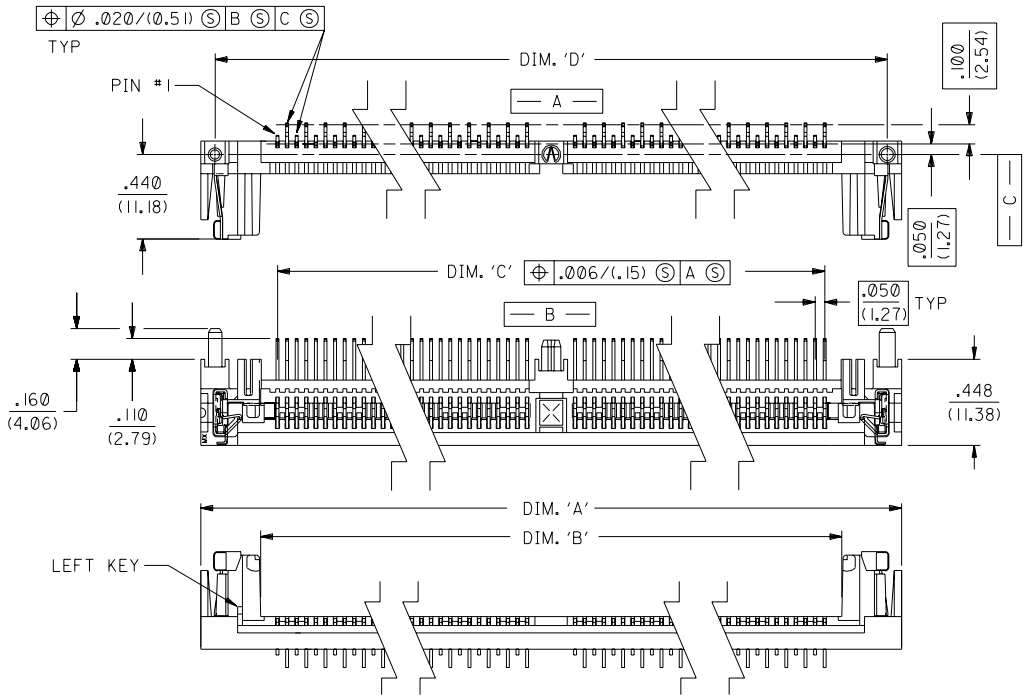

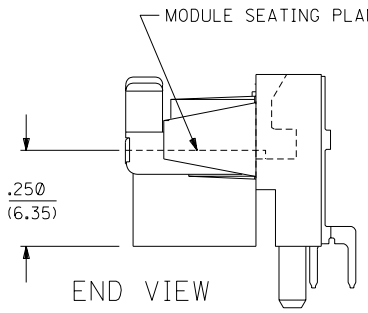

END VIEW
SCALE 4:1

CIRCUITS	DIM. 'A'	DIM. 'B'	DIM. 'C'	DIM. 'D'	DIM. 'E'	DIM. 'F'	DIM. 'G'	ENG. NUMBER TIN PLATING	EDP NUMBER TIN PLATING	ENG. NUMBER GOLD PLATING	EDP NUMBER GOLD PLATING
40	2.950/(74.93)	2.327/(59.11)	2.150/(54.61)	2.800/(71.12)	2.650/(67.31)	2.384/(60.55)	.950/(24.13)	-4046	15-82-1542	-4047	15-82-1549
64	4.150/(105.41)	3.527/(89.58)	3.350/(85.09)	4.000/(101.60)	3.850/(97.79)	3.584/(91.03)	1.550/(39.37)	-6445	15-82-1543	-6446	15-82-1550
68	4.350/(110.49)	3.727/(94.66)	3.550/(90.17)	4.200/(106.68)	4.050/(102.87)	3.784/(96.12)	1.650/(41.91)	-6845	15-82-1544	-6846	15-82-1551
72	4.550/(115.57)	3.927/(99.74)	3.750/(95.25)	4.400/(111.76)	4.250/(107.95)	3.984/(101.19)	1.750/(44.45)	-7248	15-82-1538	-7230	15-82-0312
80	4.950/(125.73)	4.327/(109.90)	4.150/(105.41)	4.800/(121.92)	4.650/(118.11)	4.384/(111.35)	1.950/(49.53)	-8046	15-82-1546	-8047	15-82-1552
84	5.150/(130.81)	4.527/(114.98)	4.350/(109.22)	5.000/(127.00)	4.850/(123.19)	4.584/(116.43)	2.050/(52.07)	-8446	15-82-1547	-8447	15-82-1553
100	5.950/(151.13)	5.327/(135.13)	5.150/(130.81)	5.800/(147.32)	5.650/(143.51)	5.384/(136.75)	2.450/(62.23)	-1045	15-82-1548	-1030	15-82-0311

MFG.	SH.	REV.	LTR.	REVISIONS
			D	SEE SHEET 1
			A	SEE SHEET 1

▽ = 0 ▼ = 0 REVISE ONLY ON CAD SYSTEM

DIMENSIONS SHOWN (METRIC) INCH
UNLESS OTHERWISE SPECIFIED TOLERANCES: ANGULAR ± 1/2°

	INCH	METRIC
3 PLACE	± .01	---
2 PLACE	± .014	± 0.25
1 PLACE	---	± 0.36

DRAFT WHERE APPLICABLE MUST REMAIN WITHIN DIMENSIONS

TITLE
SALES ASSM, METAL LATCH .250 MOD. HGT. ,LEFT(STD.) KEY, RIGHT ANGLE SIMM SOCKET

molex MOLEX INCORPORATED LISLE,ILL. 60532 U.S.A.

SHEET NO. 20 | DATE 11/11/93

PART NO. SEE CHART | DRWG. NO. SDA-78968-****

DRWG. BY AMD | CHK'D. BY | APP'D. BY | SCALE 2 : 1

FILE NAME SD7896820 DGN

THIS DRAWING CONTAINS INFORMATION THAT IS PROPRIETARY TO MOLEX INC. AND SHOULD NOT BE USED WITHOUT WRITTEN PERMISSION.

DIV. DA | SIZE C

78968