MATERIAL NO. (STANDARD PART)	MATERIAL NO. (10A IMPRINTING)	MATERIAL NO. (WITHOUT WIRE PROTECTORS)	MATERIAL NO. (10A IMPRINTING AND WITHOUT WIRE PROTECTORS)	NUMBER OF CIRCUITS "XX"	DIM. "A"	DIM. "B"
398501602	398501802	398501902	398502702	02	10.2 [.40]	5.00 [.197]
398501603	398501803	398501903	398502703	03	15.2 [.60]	10.00 [.394]
398501604	398501804	398501904	398502704	04	20.2 [.80]	15.00 [.591]
398501605	398501805	398501905	398502705	05	25.2 [.99]	20.00 [.787]
398501606	398501806	398501906	398502706	06	30.2 [1.19]	25.00 [.984]
398501607	398501807	398501907	398502707	07	35.2 [1.39]	30.00 [1.181]
398501608	398501808	398501908	398502708	08	40.2 [1.58]	35.00 [1.378]
398501609	398501809	398501909	398502709	09	45.2 [1.78]	40.00 [1.575]
398501610	398501810	398501910	398502710	10	50.2 [1.98]	45.00 [1.772]
398501611	398501811	398501911	398502711	11	55.2 [2.17]	50.00 [1.969]
398501612	398501812	398501912	398502712	12	60.2 [2.37]	55.00 [2.165]
398501613	398501813	398501913	398502713	13	65.2 (2.57)	60.00 [2.362]
398501614	398501814	398501914	398502714	14	70.2 [2.76]	65.00 [2.559]
398501615	398501815	398501915	398502715	15	75.2 [2.96]	70.00 [2.756]
398501616	398501816	398501916	398502716	16	80.2 [3.16]	75.00 [2.953]
398501617	398501817	398501917	398502717	17	85.2 [3.35]	80.00 [3.150]
398501618	398501818	398501918	398502718	18	90.2 [3.55]	85.00 [3.346]
398501619	398501819	398501919	398502719	19	95.2 [3.75]	90.00 [3.543]
398501620	398501820	398501920	398502720	20	100.2 [3.95]	95.00 [3.740]
398501621	398501821	398501921	398502721	21	105.2 [4.14]	100.00 [3.937]
398501622	398501822	398501922	398502722	22	110.2 [4.34]	105.00 [4.134]
398501623	398501823	398501923	398502723	23	115.2 [4.54]	110.00 [4.331]
398501624	398501824	398501924	398502724	24	120.2 [4.73]	115.00 [4.528]

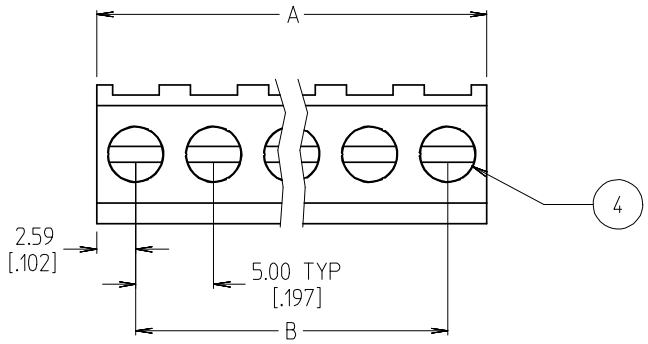

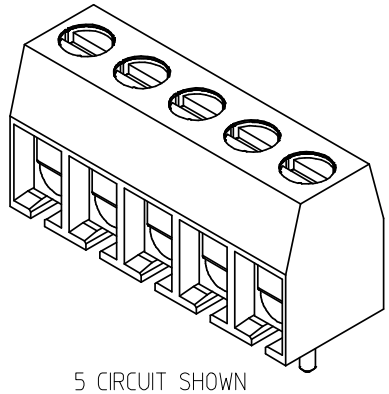

5 CIRCUIT SHOWN

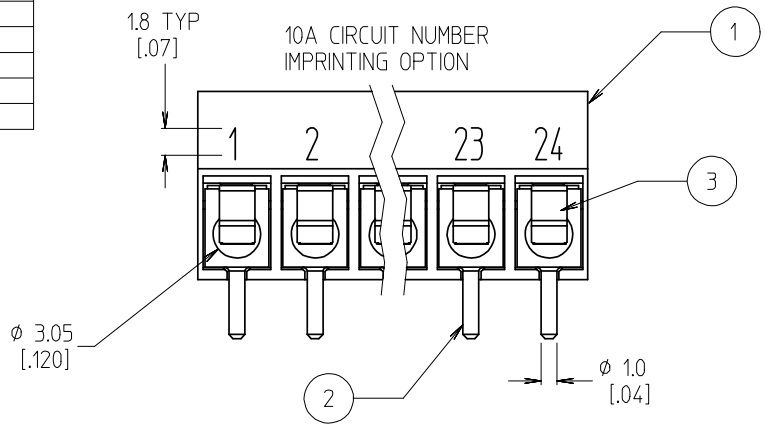

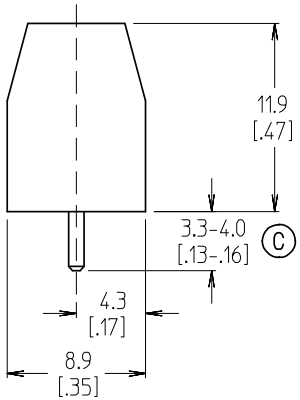

NOTES:

1. MATERIAL: SEE TABLE
2. FINISHES: SEE TABLE
3. PRODUCT SPECIFICATION: NOT REQUIRED
4. PACKAGING: NOT REQUIRED
5. MATES WITH: NONE
6. "XX" REFERS TO THE QUANTITY OF CIRCUITS.
7. ASSEMBLY WITH -72 OPTION DOES NOT HAVE WIRE PROTECTORS.
8. (C) INCH DIMENSIONS ARE SHOWN IN BRACKETS [.XXX].
9. ALL COMPONENTS ARE ROHS COMPLIANT.

ITEM	QTY	DESCRIPTION	MATERIAL	FINISH
4	XX	SCREW, M2.5 X 0,45 CPT SLOTTED	STEEL	ZN, CLEAR CHROMATE
3	XX	WIRE PROTECTOR	PHOSPHOR BRONZE	TIN
2	XX	TERMINAL	BRASS	TIN
1	1	BARRIER	THERMOPLASTIC	BLACK

REDRAWN & REVISED
EC NO: ETC2007-0078 2006/09/28
DRWN:EHILE 2006/09/28
CH'KD:JMACNEIL 2006/09/29
APPR:JMACNEIL
DESCRIPTION
C
REV

QUALITY SYMBOLS
▼=0
(C)=0

GENERAL TOLERANCES (UNLESS SPECIFIED)

	mm	INCH
4 PLACES	± ---	± ---
3 PLACES	± ---	± .005
2 PLACES	± 0.13	± .01
1 PLACE	± 0.3	± ---
ANGULAR ± 2 °		

DRAFT WHERE APPLICABLE MUST REMAIN WITHIN DIMENSIONS

DIMENSION STYLE: MM/IN
SCALE: 3:1
DESIGN UNITS: INCH
THIRD ANGLE PROJECTION

DRAWN BY: R. KEMP DATE: 2003/07/15
CHECKED BY: R. STONE DATE: 2003/07/16
APPROVED BY: P. WALTZ DATE: 2003/07/16

TITLE: SR BTS ASSY, 5.00 MM [.197] CENTERS

molex MOLEX INCORPORATED

MATERIAL NO.: SEE CHART
DOCUMENT NO.: SD-39850-001
SHEET NO.: 1 OF 1
SIZE: B

THIS DRAWING CONTAINS INFORMATION THAT IS PROPRIETARY TO MOLEX INCORPORATED AND SHOULD NOT BE USED WITHOUT WRITTEN PERMISSION