DWG. NO. SD-54603-005

番号 No.	部品 PART NAME	材質 MATERIAL	仕上げ FINISH
①	リセプタクル ハウジング RECEPTACLE HOUSING	液晶ポリマー、ガラス充填、自然色（白）、UL94V-0 LCP , GRASS FILLED , NATURAL(WHITE) , UL94V-0	—
②	リセプタクル カバー RECEPTACLE COVER	液晶ポリマー、ガラス充填、自然色（白）、UL94V-0 LCP , GRASS FILLED , NATURAL(WHITE) , UL94V-0	—
③	リセプタクル ターミナル RECEPTACLE TERMINAL	りん青銅 PHOSHOR BRONZE	△1.

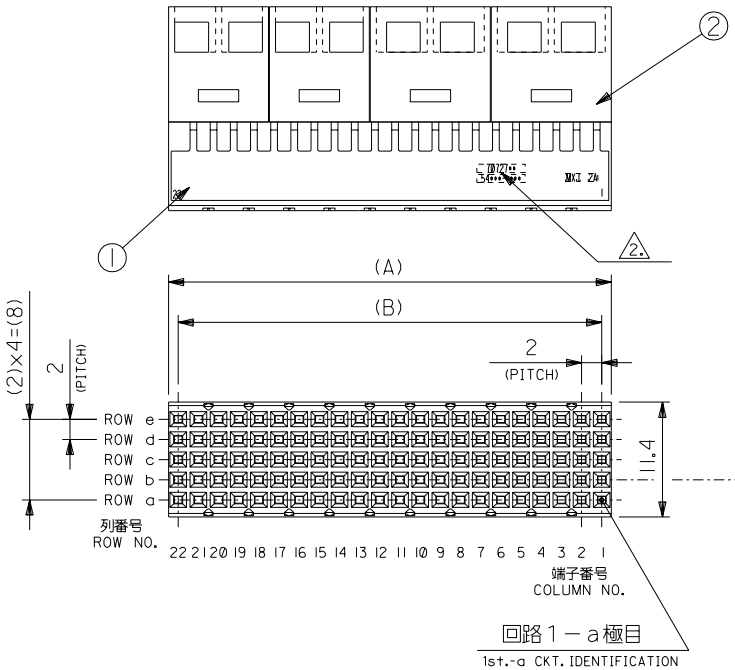

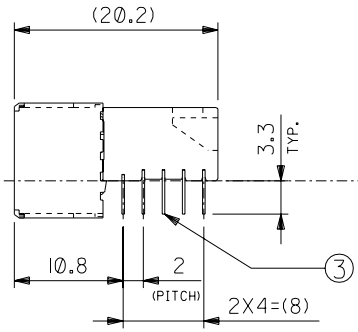

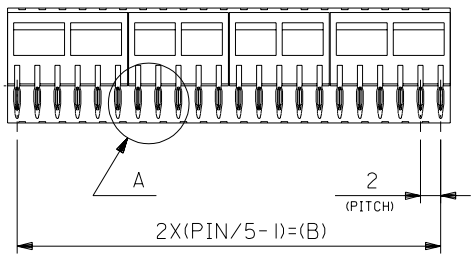

PRESS-FIT TAIL

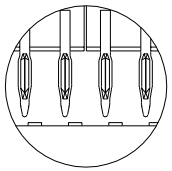

DETAIL A
(SCALE:4-1)

注記
NOTES

△1. ターミナルめっき仕様
TERMINAL PLATING
金めっき： 0.8 μm MIN.（接点部）
GOLD: 0.8 μm MIN. (CONTACT AREA)
半田めっき： 0.5 μm MIN.（プレスフィット部）
TIN-LEAD: 0.5 μm MIN. (PRESS-FIT AREA)
ニッケルめっき： 1.3 μm MIN.（下地めっき）
NICKEL: 1.3 μm MIN. (UNDER PLATING)

△2. 製品番号及びロットナンバー
MATERIAL NO. & LOT NO.

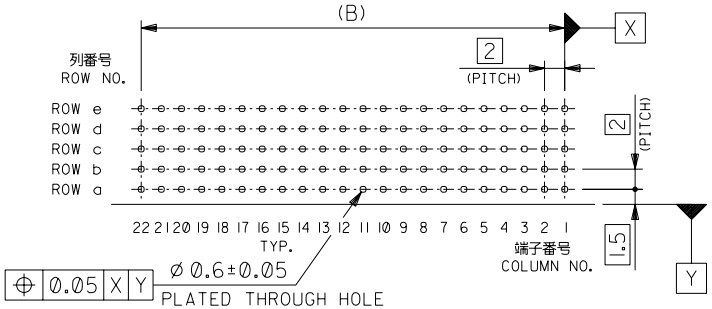

基板穴推奨寸法（部品実装）
RECOMMENDED P.C.B. LAYOUT (COMPONENT SIDE)

43.9	42	54603-1109	110
37.9	36	54603-0959	95
A	B	MATERIAL NO.	極数 PIN

MODEL NO. : 54603-***9

EC NO.	DRWN	CH'K	APPR	DESCRIPTION
C	REVISED J2002-2423 S.ANDO 02/03/27	A.NODA	A.NODA	
B	REVISED D2000-1248 S.HOSHIKAWA 99/11/18	A.NODA	H.IKESUGI	
A	RELEASED D2000-0529 S.HOSHIKAWA 99/11/18	A.NODA	H.IKESUGI	

REV

MATERIAL 材料 —
FINISH 仕上げ —
WIRE RANGE 適用電線範囲 —
INS. RANGE 被覆外径

GENERAL TOLERANCES: (UNLESS SPECIFIED) 一般公差

10 UNDER 未満	±0.2
10 OVER 以上 30 UNDER 未満	±0.25
30 OVER 以上	±0.3
ANGLE 角度	±3°

SCALE 2-1
DESIGN UNITS ☒mm ☐INCH
THIRD ANGLE PROJECTION
DIMENSIONS: ☐ mm/INCH ☐ INCH/mm ☒ mm ONLY
SHT REV
REVISE ON CAD ONLY

DRAWN BY & DATE S.Hoshikawa
CHECKED BY & DATE A.Noda
APPROVED BY & DATE A.Nagase

TITLE: "MZP" B/B CONN. REC. RIGHT ANGLE ASS'Y COMPACT PCI TYPE

molex MOLEX INCORPORATED

CAD FILENAME SD-54603-005.S01
MATERIAL NO. SEE TABLE
DRAWING NO. SD-54603-005
SHEET NO. 1 OF 1

THIS DRAWING CONTAINS INFORMATION THAT IS PROPRIETARY TO MOLEX INCORPORATED AND SHOULD NOT BE USED WITHOUT WRITTEN PERMISSION.

SIZE B

DO NOT SCALE DRAWING

SD-54603-005.S01

EN-02J(097) MXJ-54

DWG. NO. SD-54603-006

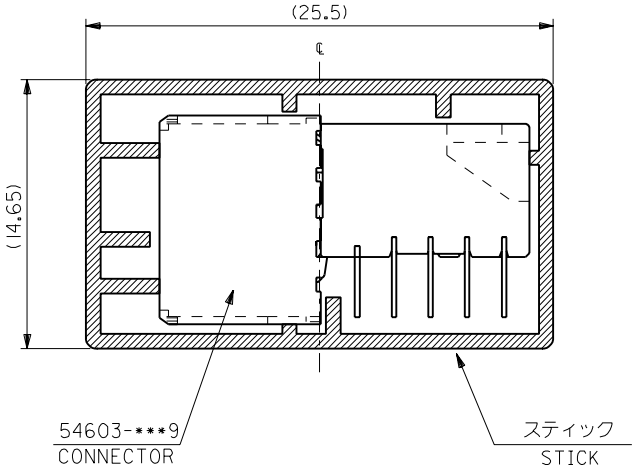

注記
NOTES

1. スティック両端はテープ止め。
   BOTH ENDS WITH TAPES.
2. 全長：600±2mm
   TOTAL LENGTH : 600±2mm
3. 肉厚：0.8±0.2mm
   THICKNESS : 0.8±0.2mm

梱包数 QUANTITY	MATERIAL NO.	極数 PIN
13	54603-1101	110
15	54603-0951	95

MODEL NO. : 54603-***1

MATERIAL 材料	スティック：ポリ塩化ビニル STICK : P.V.C.	GENERAL TOLERANCES: (UNLESS SPECIFIED) 一般公差	
FINISH 仕上げ	—	10 UNDER 未満	±0.2
WIRE RANGE 適用電線範囲	—	10 OVER 以上 30 UNDER 未満	±0.25
INS. RANGE 被覆外径	—	30 OVER 以上	±0.3
		ANGLE 角度	±3°

SCALE 4-1
DESIGN UNITS ☒mm ☐INCH
THIRD ANGLE PROJECTION
DIMENSIONS: ☐ mm/INCH ☐ INCH/mm ☒ mm ONLY
SHT REV
REVISE ON CAD ONLY
DRAWN BY & DATE
CHECKED BY & DATE
APPROVED BY & DATE
CAD FILENAME SD-54603-006.S01
TITLE: "MZP" B/B CONNECTOR REC. R/A ASS'Y TYPE B (CPCI) STICK PACKAGING
molex MOLEX INCORPORATED
MATERIAL NO. SEE CHART
DRAWING NO. SD-54603-006
SHEET NO. 1 OF 1
SIZE B

REV	DESCRIPTION	DRWN	CH'K	APPR
B	REVISED JD2001-0854	YU.HASEGAWA '00/12/19	A.NODA	H.IKESUGI
A	RELEASED JD2000-1248	S.HOSHIKAWA '00/05/18	A.NODA	H.IKESUGI

DO NOT SCALE DRAWING

THIS DRAWING CONTAINS INFORMATION THAT IS PROPRIETARY TO MOLEX INCORPORATED AND SHOULD NOT BE USED WITHOUT WRITTEN PERMISSION.

SD-54603-006.S01

EN-02J(097) MXJ-54