THIS DRAWING IS THE PROPERTY OF FAIRCHILD SEMICONDUCTOR CORPORATION. NO USE THEREOF SHALL BE MADE OTHER THAN AS A REFERENCE FOR PROPOSALS AS SUBMITTED TO FAIRCHILD SEMICONDUCTOR CORPORATION FOR JOBS TO BE EXECUTED IN CONFORMITY WITH SUCH PROPOSALS UNLESS THE CONSENT OF SAID FAIRCHILD SEMICONDUCTOR CORPORATION HAS PREVIOUSLY BEEN OBTAINED. NO PART OF THIS DRAWING SHALL BE COPIED OR DUPLICATED OR ITS CONTENTS DISCLOSED. THE INFORMATION CONTAINED ON THIS DRAWING IS CONFIDENTIAL AND PROPRIETARY.

REVISIONS

NBR	DESCRIPTION	DATE	BY/APP'D
1	RELEASED TO DCC	29JUL08	HYANG/ SUZHOU
2	CHANGE 3.10 TO 3.05	05AUG08	HYANG/ SUZHOU

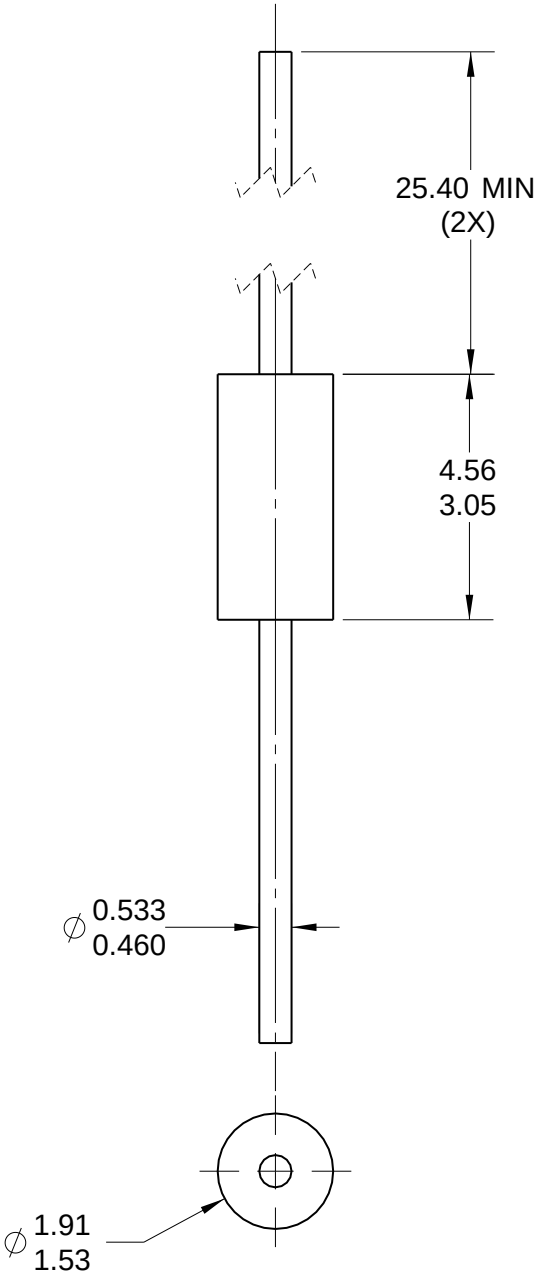

NOTES: UNLESS OTHERWISE SPECIFIED

A) PACKAGE STANDARD REFERENCE:
JEDEC DO-204, VARIATION AH.
B) HERMETICALLY SEALED GLASS PACKAGE.
C) PACKAGE WEIGHT IS 0.137 GRAM.
D) ALL DIMENSIONS ARE IN MILLIMETERS.
E) DRAWING FILE NAME: DO35AREV02

APPROVALS	DATE
DRAWN: BOBOY MALDO	05AUG08
CHECKED: HENRY YANG	
APPROVED: BY HUANG	
APPROVED: HOWARD ALLEN	

PROJECTION [MM] INCH

FAIRCHILD SEMICONDUCTOR™

AXIAL LEADED, GLASS,
JEDEC DO204 , VARIATION AH

SCALE	SIZE	DRAWING NUMBER	REV
1:1	N/A	MKT-DO35A	2

FORMERLY: N/A

SHEET : 1 OF 1