Switching Power Supplies

BAE PS-XA-3Y-24-200-022
Order Code: BAE0117

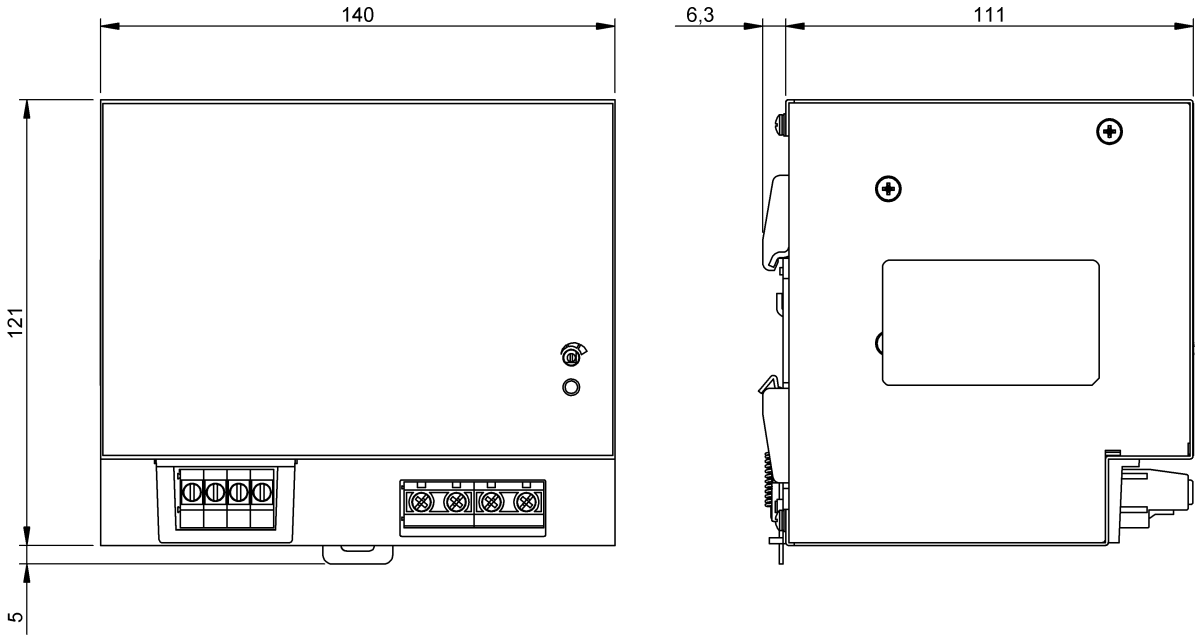

Basic features

Approval/Conformity	CE cURus cULus WEEE
Basic standard	EN 61204
Series	Standard
Short description	Switching power supply
Version	DIN rail

Electrical connection

Connection	0.25...4 mm²
Interconnected operation type	Parallel wiring: max. 3 devices Series wiring: max. 2 devices
Short-circuit protection	pulsed / Forward characteristic

Electrical data

Derating	-2.5 %/°C > +61 °C
Display	DC LOW DC ON
Efficiency typ.	91 %
Hold-up time	≥ 20 ms at 400 V AC
Input fuse	T 3.15 A (3x)
Input voltage	340...575 V AC 480...820 V DC
Input/output insulation voltage	3000 V AC
Inrush current	≤ 25 A at 400 V AC
Isolation resistance	≥ 100 MOhm
Load control	±5 % parallel ±1 % single
Output capacity max.	480 W
Output voltage	24 VDC
Output voltage, tolerance	+1 %
Protection class	I
Rated input current	1.1 A at 400 V AC
Rated output current	20 A
Residual ripple max.	100 mV
Setting range	24…28 V DC
Settling time	2 ms

Switching frequency	80000 Hz
Turn-on time max.	1 s
Voltage control	1 %
Working frequency	47…63 Hz

Environmental conditions

Ambient temperature	-25...80 °C
Contamination scale	2
Cooling	Free convection
EN 60068-2-27, Shock	15 g, 11 ms, xyz-axis, 6 surfaces (3x)
EN 60068-2-6, Vibration	2 g, 10…500 Hz, xyz-axis, 60 min
IP rating	IP20
Over temperature	protected
Relative humidity	20…95 %, non-condensing
Storage temperature	-25...85 °C
Temperature coefficient max.	±0.03 %/K

Functional safety

MTTF (40 °C)	47 a

Material

Housing material	Metal

Mechanical data

Dimension	140 x 121 x 117.3 mm
Mounting part	DIN rail mount
Weight	1.35 kg

Remarks

Values measured at +25 °C and full load.

For more information about MTTF and B10d see MTTF / B10d Certificate

Indication of the MTTF- / B10d value does not represent a binding composition and/or life expectancy assurance; these are simply experiential values with no warranty implications. These declared values also do not extend the expiration period for defect claims or affect it in any way.
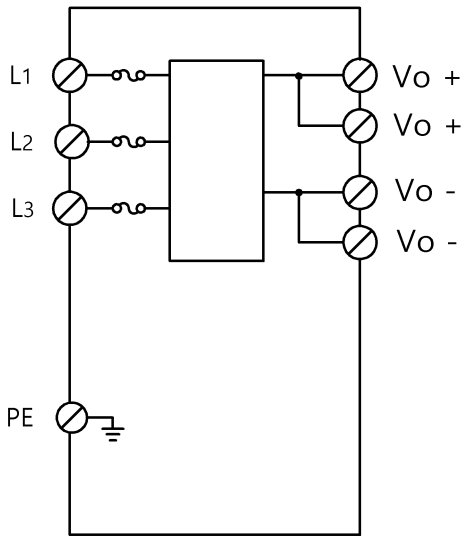
Wiring Diagrams