LF (125 kHz)

BIS L-201-03/L
Order Code: BIS003T

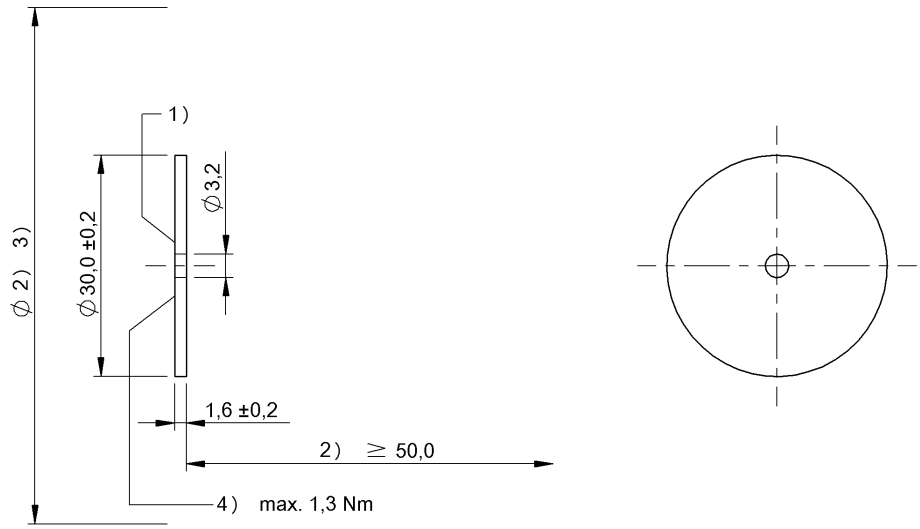

1) Sensing surface, 2) Clear zone, 3) see corresponding R/W head, 4) Tightening torque

Basic features

Antenna type	round
Approval/Conformity	CE WEEE
EN 55011	Size 1, Cl. A
EN 55022	Size 1, Cl. B
Principle of operation	Data carrier

Electrical data

Data retention time/years	Unlimited
Read cycles	Unlimited
Read time	for 40 bits: 0.235s

Environmental conditions

Ambient temperature	-40...85 °C
Continuous shock load	yes
EN 60068-2-27, Shock	yes
EN 60068-2-32 Free fall	yes
EN 60068-2-6, Vibration	yes
IP rating	IP67, 1 m, 30 min
Storage temperature	-40...95 °C

Functional Characteristics

Memory type	PROM
UID serial number, read-only	5 Byte

Material

Housing material	Epoxy-resin/fiberglass, GF

Mechanical data

Application weight	2.40 g
Dimension	Ø 30 x 1.6 mm
Installation	metal-free (clear zone) on metal flush in metal

Remarks

Values are under rated conditions unless otherwise specified.
Only when used together with the appropriate read/write head.
For installation requirements see corresponding read/write head.
Time specification includes data check.
Torsional, bending and impact loading is not permitted.
a) Hygroscopicity The hygroscopicity of the cured material depends heavily on the ambient temperature. Saturation in water at +20 °C / 6 days = 0.3 %
Saturation in water at +70 °C / 3 days = 3.0 %
For installation in metal: Observe clear zone.
Recommended screw: M3, 8.8