HF (13.56 MHz)

BIS VM-343-401-S4
Order Code: BIS013Z

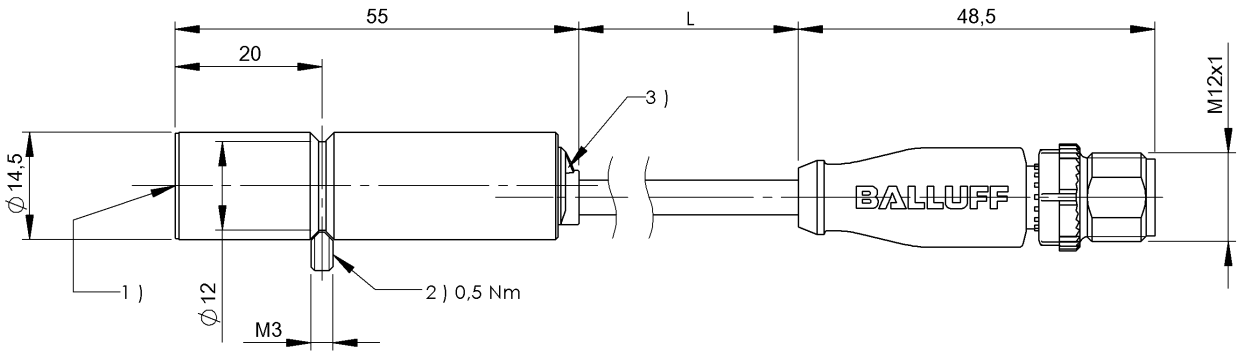

1) Sensing surface, 2) Tightening torque, 3) Function indicator

Basic features

Antenna type	round
Approval/Conformity	CE UKCA cULus FCC IC (Radio) WEEE NCC KC MIC
Principle of operation	Read/write head

Display/Operation

Function indicator	Operating, LED yellow flashing CP (Code tag present), LED yellow Power (ON), LED green

Electrical connection

Bending radius min., fixed cable	5 x D
Bending radius min., flexible cable	10 x D
Cable diameter D	4.70 mm
Cable length L	0.3 m
Cable, bending cycles min.	2 mil.
Connection	Male, 4-pin
Connection type	0.30 m, PU

Environmental conditions

Altitude max.	2000 m
Ambient temperature	0...70 °C
Area of operation	Indoor
Cable temperature, drag chain	-25...60 °C
Cable temperature, fixed routing	-50...80 °C
Contamination scale	2
Continuous shock load	yes
EN 60068-2-27, Shock	yes
EN 60068-2-32 Free fall	yes
EN 60068-2-6, Vibration	yes
IP rating	IP67
Relative humidity	0…90 %, non-condensing
Storage temperature	-20...85 °C

Functional Characteristics

Supported data carrier types	DIN ISO 15693 DIN ISO 15693 (High Memory)

Material

Housing material	Brass, nickel-plated
Housing material, surface protection	nickel-plated
Material jacket	PU

Mechanical data

Application weight	65.00 g
Dimension	Ø 14.5 x 55 mm
Installation	metal-free (clear zone) on metal flush in metal

Remarks

Only together with BIS V-61xx
For basic equipment: Accessories see www.balluff.com
Only for data carriers acc. to ISO 15693.
Values are under rated conditions unless otherwise specified.
This device is intended to be supplied by a UL-listed or CSA-certified power supply unit with "Class 2" or LPS power source.
The devices must be installed permanently.
1. Determine a suitable mounting position.
2. Fasten the device with suitable mounting material.
The device can be cleaned with a slightly damp cloth.
Regularly check the function of the device and all associated components through visual and functional tests.
- Shut down the device in the event of malfunctions.
- Secure the system against unauthorized use.
- Check fastening and tighten if necessary.
The product is maintenance-free.

Help Views

BIS VM-343-401

passende Datenträger Appropriate data carriers		BIS M-105-02/A			BIS M-116-03/A BIS M-116-08/A			BIS M-122-02/A			BIS M-130-03/L			BIS M-130-07/L		
Abstand Datenträger zu Metall in mm (**a**) Data carrier distance to metal in mm		>50	>0	>0	>50			>50	>0	>0	>50	>0	>0	>50	>0	>0
Freizone Datenträger in mm (**b**) Data carrier clear zone in mm		>200	>200	>0	>200			>200	>200	>0	>200	>200	>0	>200	>200	>0
Schreibabstand in mm Write distance in mm		0-5,5	0-5	0-4	0-3,5			0-5	0-4,5	0-3,5	0-6,5	0-6	0-3	0-5	0-5	0-2,5
Leseabstand in mm Read distance in mm		0-5,5	0-5	0-4	0-3,5			0-5	0-4,5	0-3,5	0-6,5	0-6	0-3	0-5	0-5	0-2,5
Versatz in mm bei Abstand von	0	±3,5	±3	±2,5	±3			±3,5	±3	±2,5	±4	±3,5	±3	±3	±3	±2,5
	1	±3,5	±3	±2,5	±3			±3,5	±3	±2,5	±4	±3,5	±3	±3	±3	±2,5
	2	±3,5	±3	±2,5	±3			±3,5	±3	±2,5	±4	±3,5	±2	±3	±3	±2
Offset in mm at distance	2,5	±3	±2,5	±2	±2			±3	±2,5	±2	±3	±3	±1	±2,5	±2,5	±1
	3	±3	±2,5	±2	±2			±3	±2,5	±1	±3	±3	±1	±2,5	±2,5	
	3,5	±3	±2,5	±1	±1			±3	±2,5	±1	±3	±3		±2,5	±2,5	
	4	±3	±2,5	±1				±3	±1,5		±3	±3		±2	±2	
	4,5	±2	±1,5					±2	±1,5		±3	±3		±1	±1	
	5	±2	±1,5					±2			±3	±3		±1	±1	
	5,5	±2									±2	±2				
	6										±2	±2				
	6,5										±2					
	7															
	8															
	9															
	10															
	11															
	12															
	13															
	14															
	15															

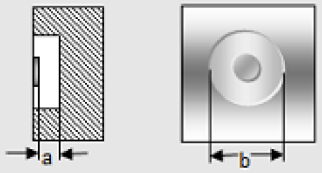

Einbauhinweis Datenträger
Installation note for data carriers

HF (13.56 MHz)

BIS VM-343-401-S4
Order Code: BIS013Z

BIS VM-343-401

passende Datenträger Appropriate data carriers		BIS M-107-03/L-H200						BIS M-142-02/A BIS M-142-20/A			BIS M-142-1x/A			BIS M-143-02/A		
Abstand Datenträger zu Metall in mm (**a**) Data carrier distance to metal in mm		>25						>0			>0			>0		
Freizone Datenträger in mm (**b**) Data carrier clear zone in mm		>100						>100			>100			>100		
Schreibabstand in mm Write distance in mm		0-7						0-7,5			0-5			0-7,5		
Leseabstand in mm Read distance in mm		0-7						0-7,5			0-5			0-7,5		
Versatz in mm	0	±4						±5			±4			±5		
bei Abstand von	2	±4						±5			±4			±5		
	4	±3,5						±5			±4			±4,5		
Offset in mm	5	±3,5						±4			±2			±4		
at distance	6	±2						±4						±4		
	7	±2						±2,5						±2		
	7,5							±2,5						±2		
	10															
	14															
	16															
	18															
	20															
	22															
	24															
	26															
	28															
	30															
	32															
	34															
	36															
	38															

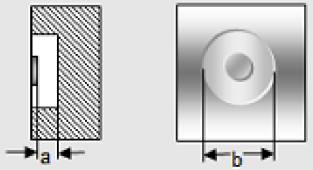

Einbauhinweis Datenträger
Installation note for data carriers