Fastening Technology

BIL 01-HW-2
Order Code: BAM00K5

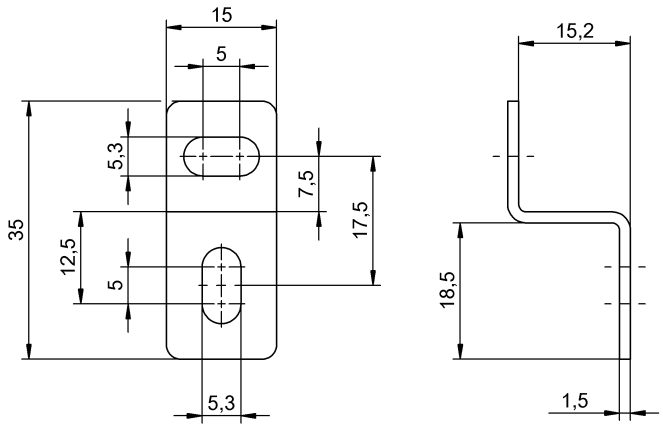

Basic features

Principle of operation	Mounting bracket, general
Use	with sensor BIL...

Material

Material	Stainless steel

Mechanical data

Dimension	35 x 16.7 x 15 mm
Mounting part	Spring washer DIN 127-B5-A2 Cylinder head screw ISO 4762 M5x10-A2
Tightening torque	2 Nm

Remarks

Use to install a minimum of 2 mounting brackets!
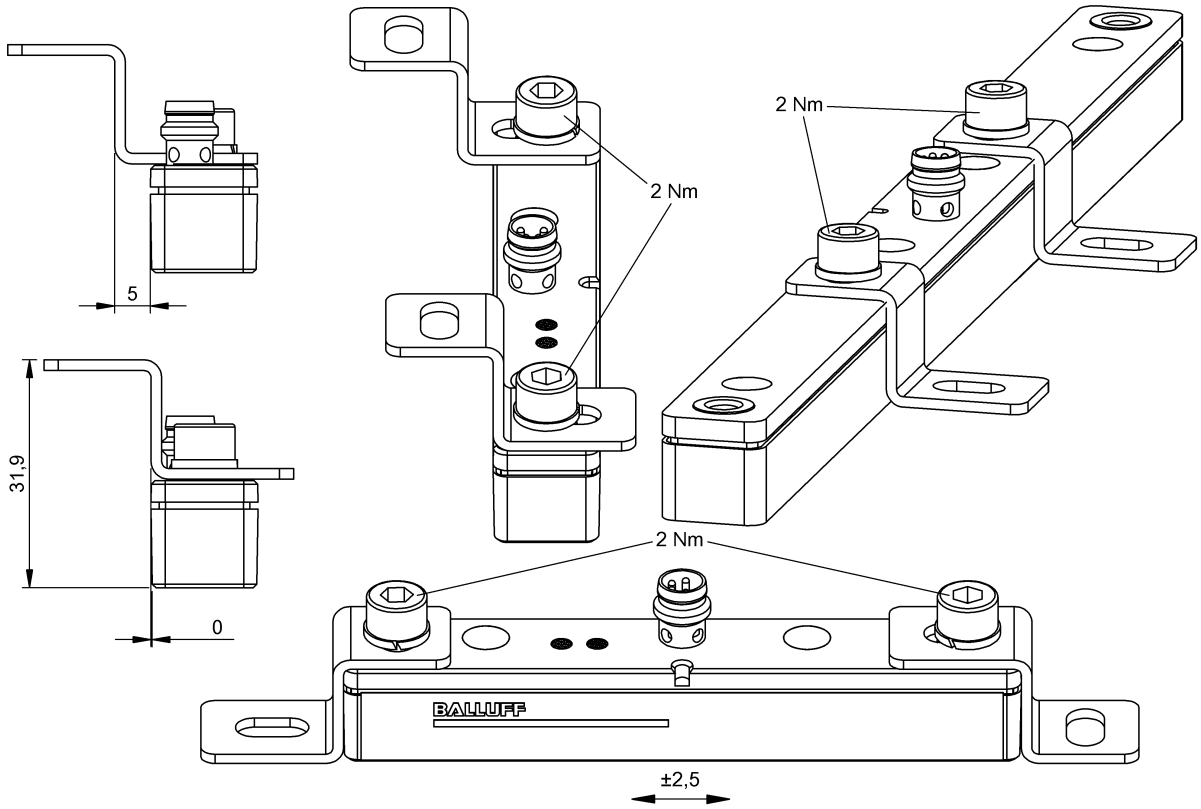
Help Views