Fastening Technology

BIS Z-HW-003
Order Code: BAM01JK

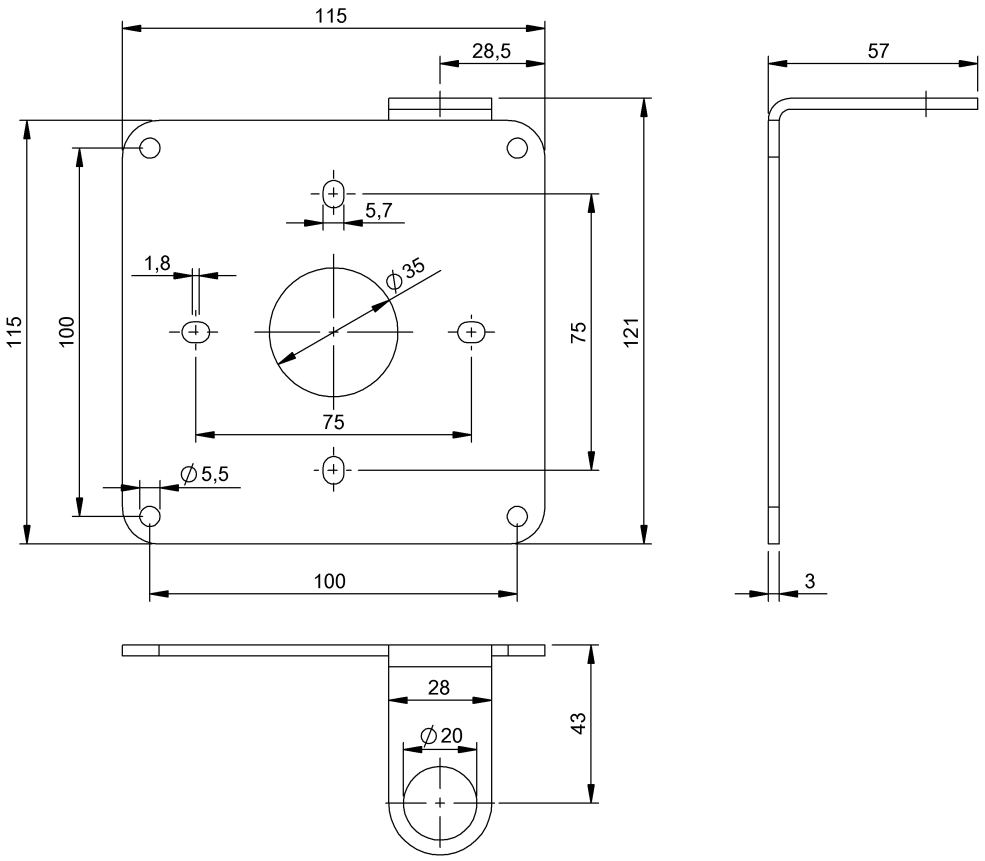

Basic features

Principle of operation	Holding RFID system
Scope of delivery	Mounting bracket Screw ISO 4762-M5x12
Use	Holder for installing antennas BIS U-3xx

Material

Material	Stainless steel (1.4571)

Mechanical data

Dimension	121 x 115 x 57 mm
Mounting part	Threads
Weight	310 g