Multi-Frequency Processor

BIS V-6108-048-C108
Order Code: BIS01H8

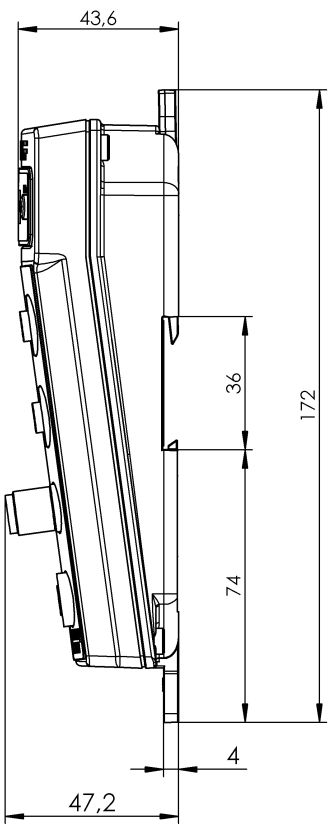

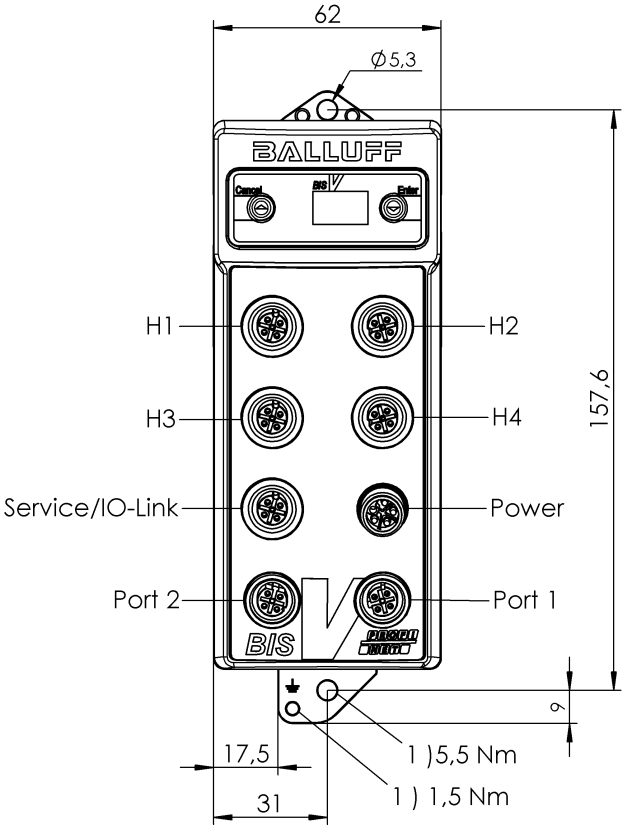

1) Tightening torque

Basic features

Approval/Conformity	CE cULus WEEE UKCA
Principle of operation	Processor unit

Display/Operation

Function indicator	System Failure Status, LED red BUS Failure Status, LED red Ready, LED green Link/Activity Port2, LED green Link/Activity Port1, LED green

Electrical connection

Connection (COM 1)	Port 1: M12x1-Female, 4-pin, D-coded
Connection (COM 2)	Port 2: M12x1-Female, 4-pin, D-coded
Connection (IO-Link/Service)	M12x1-Female, 5-pin, A-coded
Connection (supply voltage IN)	M12x1-Male, 4-pin
Connection slots	H1: M12x1-Female, 5-pin H2: M12x1-Female, 5-pin H3: M12x1-Female, 5-pin H4: M12x1-Female, 5-pin
Connector port 01, note type	for all VU/VM/VL-3... with connector, 4-pin and C-3... with adapter

Electrical data

Current consumption typ. at 24 V DC	150 mA
IO-Link function	Master (max. 500 mA)
Nominal voltage	24 VDC
Operating voltage Ub	24 V DC LPS Class 2
Residual ripple max.	10 %

Environmental conditions

Altitude max.	2000 m
Ambient temperature	0...60 °C
Area of operation	Indoor
Contamination scale	2
Continuous shock load	yes
EN 60068-2-27, Shock	yes
EN 60068-2-32 Free fall	yes
EN 60068-2-6, Vibration	yes
EN 61000-4-3 (1400...2000 MHz)	Severity level 3A
EN 61000-4-3 (2000...2700MHz)	Severity level 2A
EN 61000-4-3, 80...1000 MHz	Severity level 3A
IP rating	IP65, with connector
Relative humidity	0...90 %, non-condensing

Functional safety

MTTF (40 °C)	37.9 a

Interface

Auxiliary interfaces, number	1x IO-Link
IO-Link version	1.1
Interface	Profinet I/O (IRT) 2 port Switch

Material

Housing material	Zinc, Die casting

Mechanical data

Application weight	750.00 g
Dimension	48 x 62 x 172 mm

Remarks

When installing, the technical standards and regulations of the corresponding countries must be observed.
Values are under rated conditions unless otherwise specified.
Current consumption when 4 read/write heads and IO-Link device are connected to the IO-Link port max. 2 A
This device is intended to be supplied by a UL-listed or CSA-certified power supply unit with "Class 2" or LPS power source.
The devices must be installed permanently.
1. Determine a suitable mounting position.
2. Fasten the device with suitable mounting material.
The device can be cleaned with a slightly damp cloth.
Regularly check the function of the device and all associated components through visual and functional tests.
- Shut down the device in the event of malfunctions.
- Secure the system against unauthorized use.
- Check fastening and tighten if necessary.
The product is maintenance-free.
For more information about MTTF and B10d see MTTF / B10d Certificate

Indication of the MTTF- / B10d value does not represent a binding composition and/or life expectancy assurance; these are simply experiential values with no warranty implications. These declared values also do not extend the expiration period for defect claims or affect it in any way.

Connector Drawings

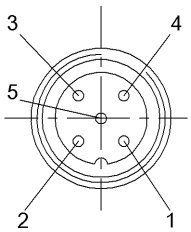

1) 2)

IO-Link/ Service

1 — VP (+ 24V DC)
2 — USB-
3 — 0V
4 — Q/C (IO/Link)
5 — USB+

1) View towards connector
2) Female 5-pin/ Function

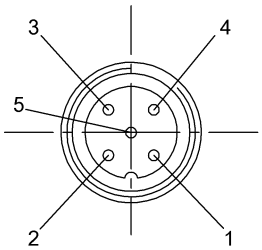

1) 2)

H1...H4

1 — VP (+24V DC)
2 — A (RS485)
3 — 0V
4 — B (RS485)
5 — N.C.

1) View towards connector
2) Female 5-pin/ Function

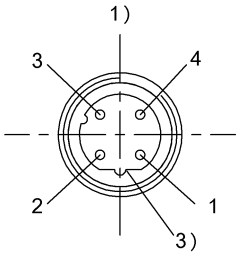

PROFINET Port 1/2

2)

1 — +TX
2 — +RX
3 — -TX
4 — -RX

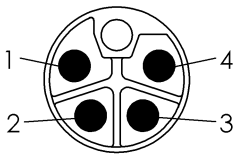

2)

Power

1 — +24V DC
2 — n.c.
3 — 0V, Us
4 — n.c.

1) View towards connector
2) Female 4-pin/ Function
3) Coding D