Mechanical Cam Switches

BNS 813-D03-R12-100-12-03-FD
Order Code: BNS00W4

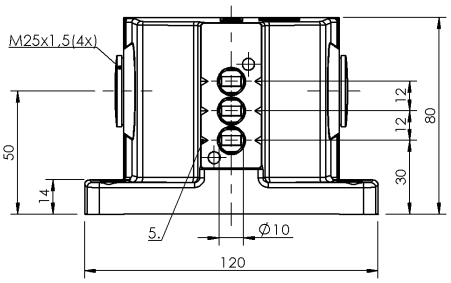

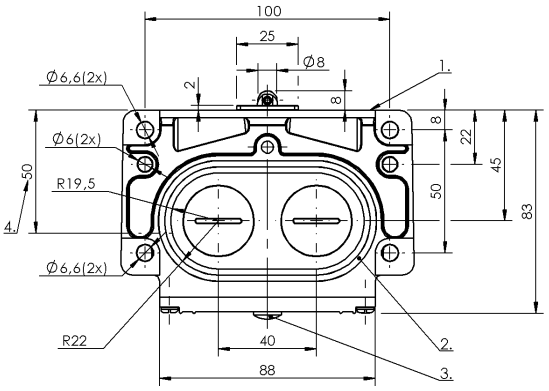

1) Reference edge, 2) Sealing ring, 3) Function indicator FD/FE/LL, 4) Cable passage, 5) Mark. Safety switch position

Basic features

Approval/Conformity	CE UKCA CCC WEEE
Basic standard	IEC 60947-5-1
DIN switch	DIN 43697
Operating principle	1-3. Switch position: Mechanical
Version	Safety EN 60204-1

Display/Operation

Function indicator	1-3. Switch position: FD - 6...60 V

Electrical connection

Connection type	1-3. Switch position: Screw terminal

Electrical data

Continuous current	1-3. Switch position: 6 A
Rated operating voltage Ue	1-3. Switch position: 250 V AC
Switching function mechanical	Double-interrupting NC forced-opening per VDE
Switching rate	1-3. Switch position: 300/min

Environmental conditions

Ambient temperature	-5...85 °C
IP rating	IP67

Functional safety

B10d (EN ISO 13849-1)	BSE 61: 30 mil. switching cycles

Material

Housing material	Aluminium, Anodized
Housing material, surface protection	Anodized
Material contacts	1-3. Switch position: Silver
Plunger material	1-3. Switch position: 1.4034 stainless steel

Mechanical data

Approach direction	longitudinal, parallel to attachment surface
Approach speed	1-3. Switch position: 60 m/min
Dimension	120 x 80 x 85 mm
Distance cam - reference edge	1-3. Switch position: 4.50...5.00 mm
Flange, feed-through	2 threaded exit M25
Installation	Vertical
Life expectancy mechanical	1-3. Switch position: 30 mil. switching operations
Number of switching positions	3x Roller Mechanical
Plunger spacing 1st switch position	30 mm
Plunger style	1-3rd switch position: Roller
Switch actuation force	1-3. Switch position: 15 N
Switching element	1-3. Switch position: BSE 61

Range/Distance

Reproducibility	1-3. Switch position: ±0.01 mm
Switch position spacing	12 mm

Wiring Diagrams
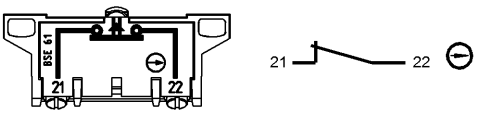
BSE 61