HF (13.56 MHz)

BIS M-451-045-001-07-S4
Order Code: BIS00LM

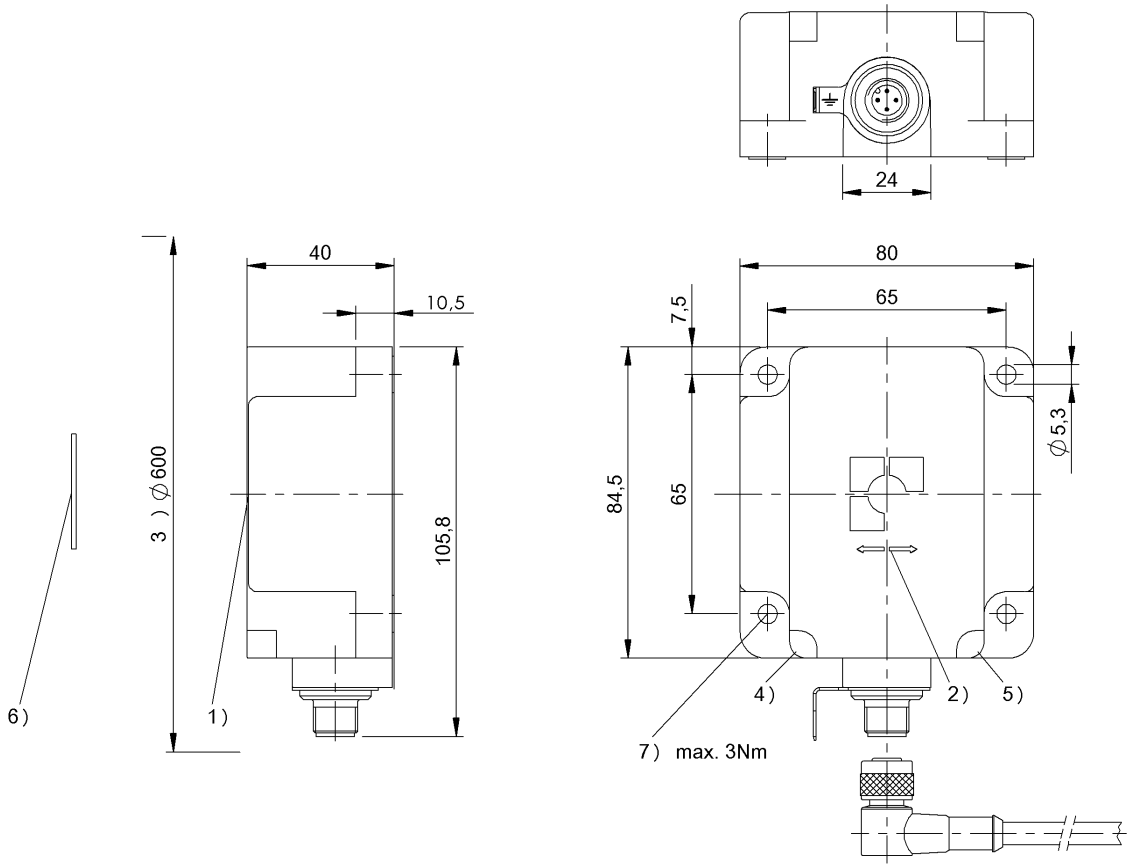

1) Sensing surface, 2) Read/write axis, 3) Clear zone, 4) LED (Power), 5) LED (TP), 6) Data carrier on steel, 7) Tightening torque

Basic features

Antenna type	Rod
Approval/Conformity	CE UKCA FCC Part 15 IC (Radio) cULus WEEE MIC KC NBTC IMDA MCMC
EN 55022	Gr. 1, Cl. A
Principle of operation	Processor unit

Display/Operation

Function indicator	Power (ON) Green LED TP (Tag Present) LED yellow

Electrical connection

Connection	M12x1-Male, 4-pin, A-coded

Electrical data

Current consumption max. at 24 V DC	150 mA
Operating voltage Ub	18...30 VDC Supports only LPS/ Class 2
Residual ripple max.	1.3 Vpp
Transfer rate	COM2 (38.4 kBaud)

Environmental conditions

Altitude max.	2000 m
Ambient temperature	0...70 °C
Area of operation	Indoor
Contamination scale	2
Continuous shock load	yes
EN 60068-2-27, Shock	yes
EN 60068-2-32 Free fall	yes
EN 60068-2-6, Vibration	yes
IP rating	IP67
Relative humidity	0...90 %, non-condensing
Storage temperature	-20...85 °C

Functional Characteristics

Supported data carrier types	DIN ISO 15693

IO-Link

IO-Link Profil IDs	N/A

Interface

Interface	IO-Link 1.1
Process data IN	10 bytes

Material

Housing material	PBT

Mechanical data

Application weight	380.00 g
Dimension	80 x 40 x 84.5 mm
Installation	metal-free (clear zone)

Remarks

For basic equipment see IO-Link catalog.
When installing, the technical standards and regulations of the corresponding countries must be observed.
Values are under rated conditions unless otherwise specified.
Order accessories separately.
For installation in metal: Observe clear zone.
This device is intended to be supplied by a UL-listed or CSA-certified power supply unit with "Class 2" or LPS power source.
The devices must be installed permanently.
1. Determine a suitable mounting position.
2. Fasten the device with suitable mounting material.
The device can be cleaned with a slightly damp cloth.
Regularly check the function of the device and all associated components through visual and functional tests.
- Shut down the device in the event of malfunctions.
- Secure the system against unauthorized use.
- Check fastening and tighten if necessary.
The product is maintenance-free.

Connector Drawings

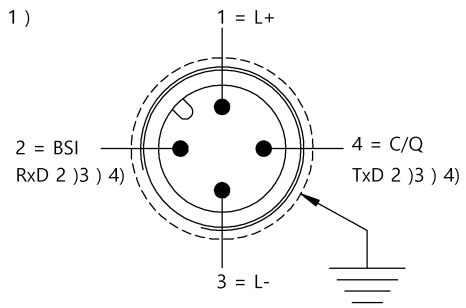

1) View towards connector
2) BSI service interface
3) Do not connect power
4) (Only for Balluff Service)

Help Views

BIS M-451-__

passende Datenträger Appropriate data carriers		BIS M-150-02/A			BIS M-151-02/A			BIS M-150-02/A			BIS M-151-02/A					
Freizone Datenträger in mm (**a**) Data carrier clear zone in mm		>200	>200		>200	>200		>200	>200		>200	>200				
Freizone Datenträger in mm (**b**) Data carrier clear zone in mm		>200	>200		>200	>200		>200	>200		>200	>200				
Datenträger Metall-Montagefläche 40x22 Data carrier metal mounting surface 40x22		0-52	0-52		0-52	0-52										
Datenträger Metall-Montagefläche ≥ 200x200 Data carrier metal mounting surface ≥ 200x200								0-65	0-65		0-65	0-65				
Schreibabstand in mm Write distance in mm		0-52	0-52		0-52	0-52		0-65	0-65		0-65	0-65				
Leseabstand in mm Read distance in mm		0-52	0-52		0-52	0-52		0-65	0-65		0-65	0-65				
Versatz in mm		X	Y		Y	X		X	Y		Y	X				
bei Abstand von	0	±60	±25		±60	±25		±65	±26		±65	±26				
	5	±60	±25		±60	±25		±65	±26		±65	±26				
Offset in mm	12	±60	±25		±60	±25		±65	±25		±65	±25				
at distance	15	±60	±25		±60	±25		±65	±25		±65	±25				
	18	±60	±25		±60	±25		±65	±25		±65	±25				
	20	±60	±25		±60	±25		±65	±25		±65	±25				
	22	±60	±25		±60	±25		±65	±25		±65	±25				
	25	±60	±25		±60	±25		±65	±25		±65	±25				
	30	±60	±25		±60	±25		±65	±25		±65	±25				
	32	±50	±25		±50	±25		±65	±25		±65	±25				
	35	±50	±25		±50	±25		±65	±25		±65	±25				
	40	±50	±20		±50	±20		±50	±25		±50	±25				
	45	±25	±20		±25	±20		±50	±25		±50	±25				
	50	±25	±20		±25	±20		±50	±25		±50	±25				
	52	±25	±8		±25	±8		±25	±25		±25	±25				
	60							±25	±10		±25	±10				
	65							±25	±10		±25	±10				

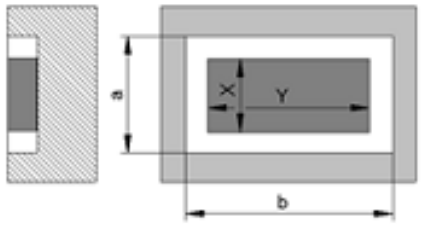

Einbauhinweis Datenträger
Installation note for data carriers

BIS M-451-__

passende Datenträger Appropriate data carriers		BIS M-152-03/A			BIS M-152-03/A			BIS M-153-02/A									
Freizone Datenträger in mm (**a**) Data carrier clear zone in mm		>200	>200		>10	>10		>240	>240								
Freizone Datenträger in mm (**b**) Data carrier clear zone in mm		>200	>200		>50	>50		>480	>480								
Freizone Datenträger in mm (**c**) Data carrier clear zone in mm		>50	>50		>2	>2		>50	>50								
Schreibabstand in mm Write distance in mm		0-30	0-30		15-30	15-30		0-100	0-100								
Leseabstand in mm Read distance in mm		0-30	0-30		15-30	15-30		0-100	0-100								
Versatz in mm		X	Y		X	Y		X	Y								
bei Abstand von	0	±35	±20					±60	±20								
	5	±35	±20					±60	±20								
Offset in mm	10	±35	±20					±60	±20								
at distance	15	±35	±20		±35	±15		±60	±20								
	20	±35	±20		±35	±15		±60	±20								
	25	±20	±12		±28	±15		±60	±20								
	30	±20	±12		±28	±15		±60	±20								
	35							±60	±20								
	40							±60	±20								
	45							±60	±20								
	50							±60	±20								
	60							±60	±20								
	70							±60	±20								
	80							±60	±20								
	90							±40	±20								
	100							±40	±20								

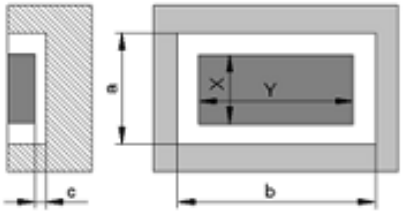

Einbauhinweis Datenträger
Installation note for data carriers