© 2025 TE Connectivity. All Rights Reserved.

REVISIONS

P	LTR	DESCRIPTION	DATE	DWN	APVD

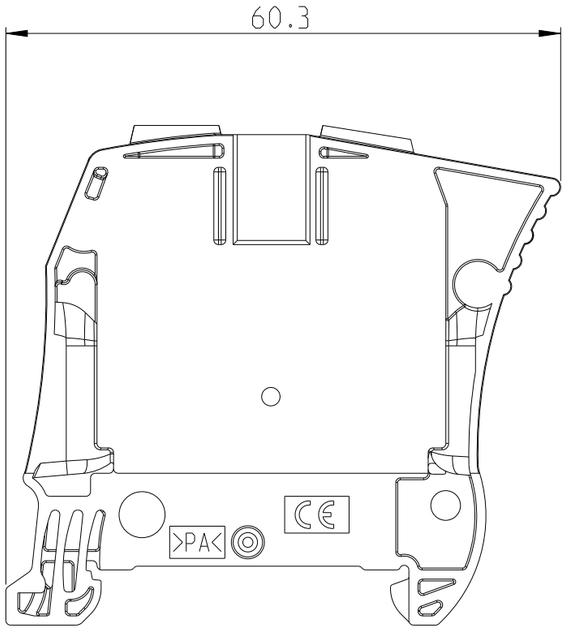

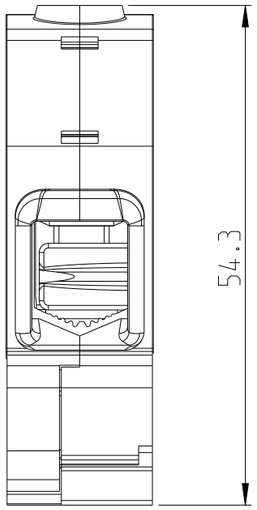

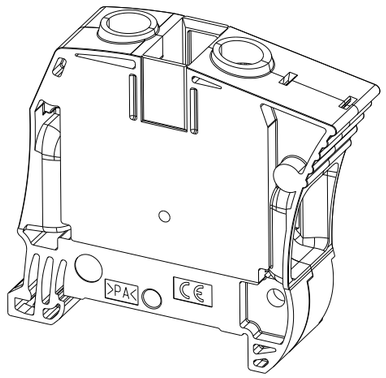

SCALE 1:1

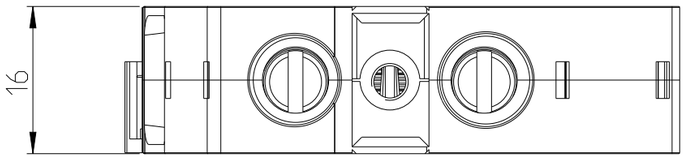

THIS DRAWING IS A CONTROLLED DOCUMENT.

DIMENSIONS: mm

TOLERANCES UNLESS OTHERWISE SPECIFIED:

0 PLC	±-
1 PLC	±0.1
2 PLC	±0.01
3 PLC	±0.001
4 PLC	±0.0001
ANGLES	±-

MATERIAL: -

FINISH: -

DWN: 4-Jan-25 04:26:19 PM Villard, Romain

CHK

APVD

PRODUCT SPEC: -

APPLICATION SPEC: -

WEIGHT: 36.944

TE Connectivity

NAME: ZS35 1SNK516010R0000 -

SIZE	CAGE CODE	DRAWING NO	RESTRICTED TO
A3	00779	C-1SNP081806-0100	-

Customer Drawing

SCALE 3:2 | SHEET 1 OF 1 | REV A

1470-19 (3/13)