LF (70/455 kHz)

BIS C-324/05-S4
Order Code: BIS007M

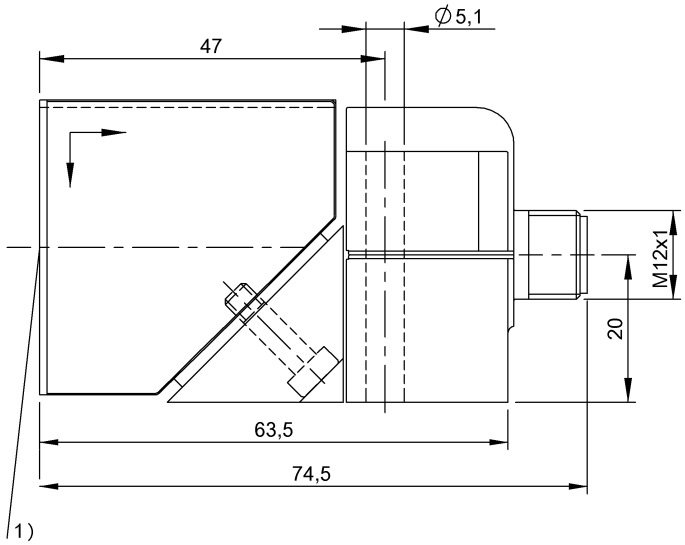

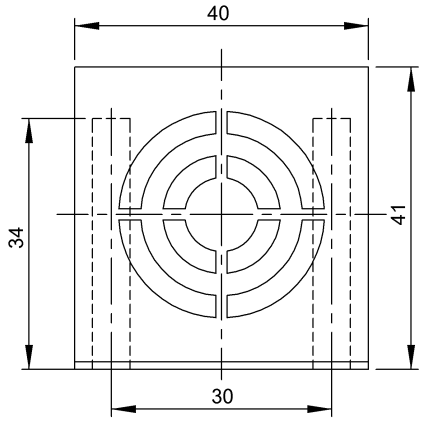

1) Sensing surface

Basic features

Antenna type	round
Approval/Conformity	CE UKCA cULus WEEE
EN 55022	Size 1, Cl. B
Principle of operation	Read/write head

Electrical connection

Connection	M12x1-Male

Environmental conditions

Ambient temperature	0...70 °C
Continuous shock load	yes
EN 60068-2-27, Shock	yes
EN 60068-2-32 Free fall	yes
EN 60068-2-6, Vibration	yes
IP rating	IP67
Storage temperature	-20...85 °C

Functional safety

MTTF (40 °C)	15080 a

Material

Housing material	PBT, Zinc fastener

Mechanical data

Application weight	180.00 g
Dimension	40 x 41 x 74.5 mm
Installation	metal-free (clear zone) on metal flush in metal

Remarks

Values are under rated conditions unless otherwise specified.
Specified relative speed refers to reading/writing the first 4 bytes from the first page.
For basic equipment order cable also, e.g.: BIS C-505-PU1-05 BIS C-505-PU-05 BIS C-506-PU1-05 BIS C-506-PU-05 BIS C-517-PVC-05 BIS C-518-PVC-05
Only together with converter BIS C-901 or BIS C-6xx
Time specification includes data check.
For more information about MTTF and B10d see MTTF / B10d Certificate

Indication of the MTTF- / B10d value does not represent a binding composition and/or life expectancy assurance; these are simply experiential values with no warranty implications. These declared values also do not extend the expiration period for defect claims or affect it in any way.

Help Views

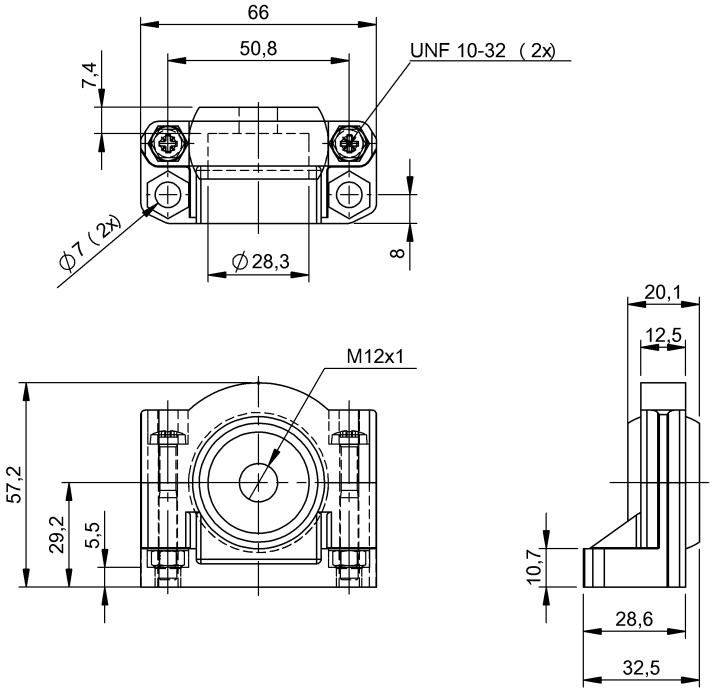
66
50,8
7,4
UNF 10-32 (2x)
∅7 (2x)
∅28,3
8
M12x1
57,2
29,2
5,5
20,1
12,5
10,7
28,6
32,5

LF (70/455 kHz)
BIS C-324/05-S4
Order Code: BIS007M

BALLUFF

BIS C-324-__

passende Datenträger Appropriate data carriers		BIS C-190-__/L nicht bündig / non-flush	BIS C-191-__/L nicht bündig / non-flush											
statischer Betrieb **Static mode**														
Schreibabstand in mm Write distance in mm		0-11	0-10											
Leseabstand in mm Read distance in mm		0-11	0-10											
Versatz in mm	0,7													
bei Abstand von	1	±10	±8											
	2													
Offset in mm	3	±9	±7,5											
at distance	4													
	5	±9	±7											
	6													
	7	±8	±6,5											
	10	±6,5												
	15													
	20													
	35													
	42													
	60													