THIS DRAWING IS UNPUBLISHED
©Copyright 2025 TE Connectivity Ltd.
RELEASED FOR PUBLICATION - , -
ALL RIGHT RESERVED.

REVISIONS				
REV	DESCRIPTION	DATE	DWN	APVD
F01	(ECN-18-00437) ADDED MOUNTING HOLES DIMENSION & DISTANCE	12OCT18	WT NG	WT NG
A1	CHANGE TO TE DRAWING FORMAT	17APR25	P K	C HANG

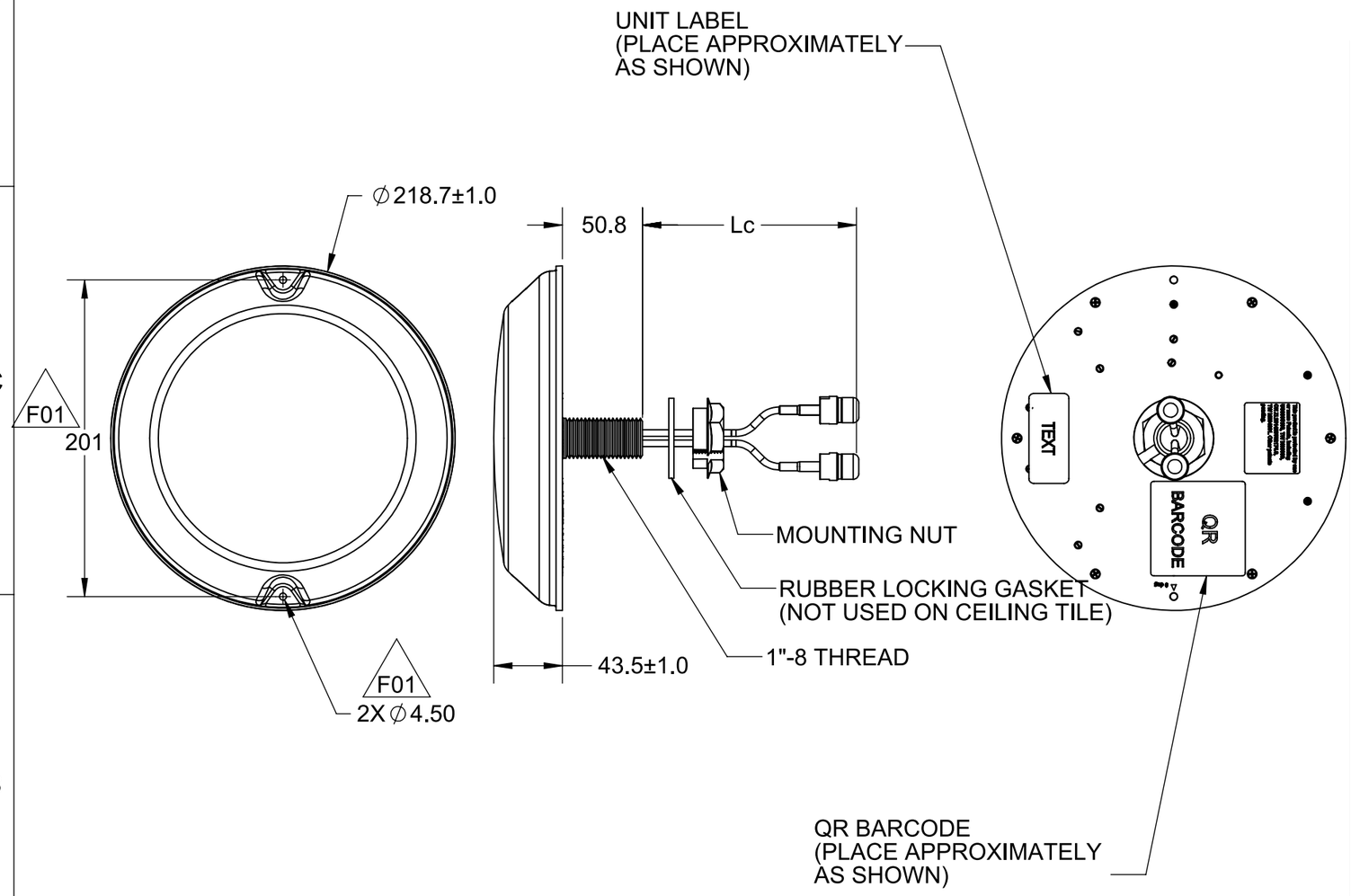

Parameter	Performance
TE connectivity part number	CMD69273P-30D43F
Antenna Type	MIMO Omni
Connector Type	4.3-10 Female (2X)
Cable type	Semi flexible 402 cable
Pigtail Length, Lc	300mm +15mm
Operating Frequency Range	698-960MHz / 1710-2700MHz
Gain (dBi)	3.1 (typical), 3.9 (max) @ 700 Band
	3.1 (typical), 3.8 (max) @ 800 Band
	2.8 (typical), 3.5 (max) @ 900 Band
	5.9 (typical), 6.8 (max) @ 1800 Band
	4.5 (typical), 5.1 (max) @ 1900 Band
	4.3 (typical), 4.7 (max) @ 2100 Band
	5.9 (typical), 6.3 (max) @ 2300 Band
	6.9 (typical), 7.4 (max) @ 2600Band
Azimuth Beam Width (deg)	Omni directional
VSWR Max	2.0:1
Port to Port Isolation	<-17dB @ 698-960MHz
	<-20dB @ 1710-2700MHz
Polarization	Linear,Omnidirectional
Max Power (watts)	50w (ambient temp of 25°C)
PIM, 3rd order, 2X20W	<-150dBc
Antenna Weight	0.45kg
Storage Temperature Range (°C)	-40 to +85
Operational Temperature Range (°C)	-30 to +70
Outdoor Rated	No
Radome	PC/ABS,UL94-V0, White
RoHS	Yes

MATERIAL: N/A

FINISH: N/A

APPROVALS		DATE
DRAWN BY	WT NG	12OCT18
ELEC. ENG.	KJ NG	12OCT18
MECH. ENG.	LL TEOH	12OCT18
MFG./OPS.	YEAP	12OCT18

THIRD ANGLE PROJECTION

DO NOT SCALE DRAWING

INTERPRET DIMENSIONING AND TOLERANCING IN ACCORDANCE WITH ASME Y14.5M-2009

TOLERANCES UNLESS OTHERWISE SPECIFIED

DIMENSIONS ARE IN MILLIMETERS

ANGLE: ±30'
0 PLACE DECIMAL: ±0.5
1 PLACE DECIMAL: ±0.25
2 PLACE DECIMAL: ±0.13

SURFACE ROUGHNESS 1.6

TE Connectivity

TITLE:

MOUNTING & OUTLINE CMD69273P-30D43F

SIZE	DWG. NO.	REV
A3	C-CMD69273P-30D43F	A1

SCALE: 1:3.5 | PREVIOUS# | SHEET 1 OF 1