THIS DRAWING IS A CONTROLLED DOCUMENT.

NUMMER	828904
VERWENDET FÜR	
WAR NR.	87-9398-50

ÄNDERUNGEN, DIE DEM TECHNISCHEN FORT-SCHRITT DIENEN, BE-HALTEN WIR UNS VOR

REVISIONS

P	LTR	DESCRIPTION	DATE	DWN	APVD
	M4	(-1) Pack qty. changed. (-2)&(-3) obsoleted.	13MAY2025	BV	GB

M1:1

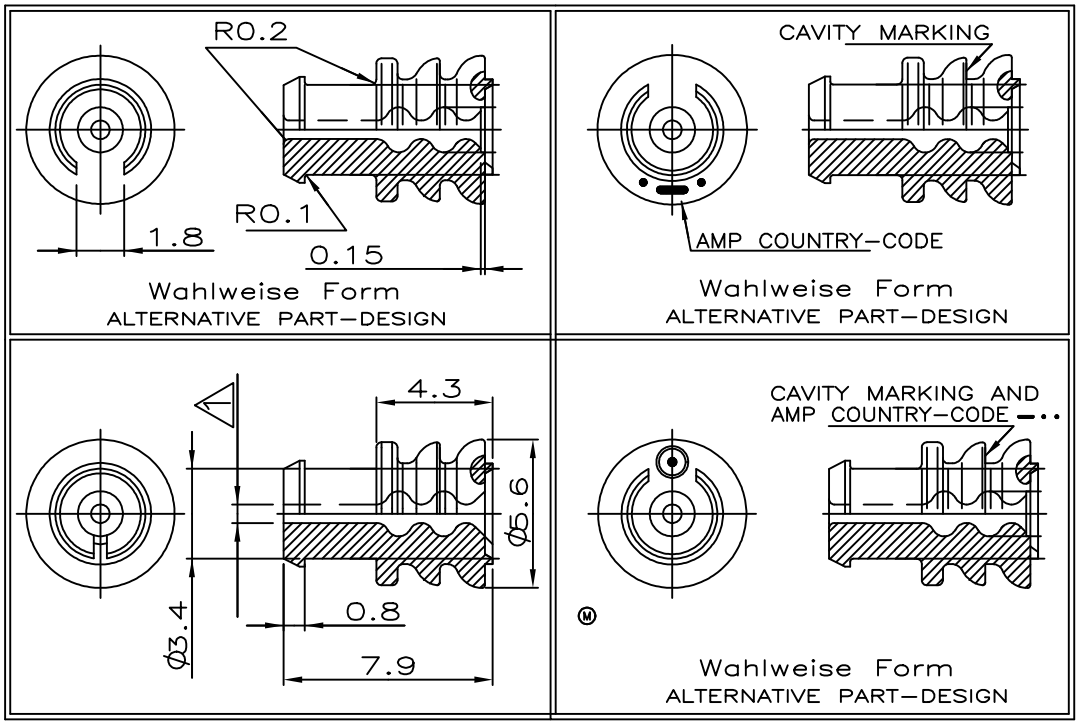

4 Note has been deleted.

3 Note has been deleted.

2 PACKAGING IN PLASTIC BAG: QTY 10 000 PIECES

1 Für Isolationsø 1.2-2.1 mm

BESTELL-NR.	REV	WERKSTOFF	OBERFLÄCHE / FARBE
828904-3 4	M	SILICON SHORE A 50° lubriziert	hellblau
828904-2 3	M		
828904-1 2	M		

CAD-ORIGINAL
ZEICHNUNG NICHT ÄNDERN

ZEICHNUNG GÜLTIG AB .....

© TE Connectivity. All Rights Reserved.

DIMENSIONS: mm

TOLERANCES UNLESS OTHERWISE SPECIFIED:

0 PLC	± -
1 PLC	± 0.3
2 PLC	± -
3 PLC	± -
4 PLC	± -
ANGLES	± -

DWN H.Bouda 16 MAY 88
CHK W. PFEFFER 17 MAY 88
APVD -
PRODUCT SPEC -
APPLICATION SPEC -
WEIGHT 0,000000

MATERIAL -
FINISH -

TE Connectivity

NAME Einzeldichtung (DIA 5.6)

SIZE	CAGE CODE	DRAWING NO	RESTRICTED TO
A4	00779	C-828904	-

CUSTOMER DRAWING

SCALE 5:1 SHEET 1 OF 1 REV M4

1469-35 (1/15)