NUMBER 178297

3rd ANGLE PROJECTION

METRIC

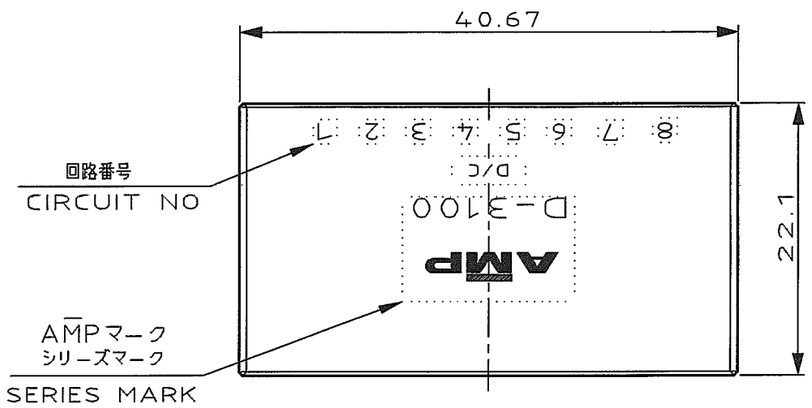

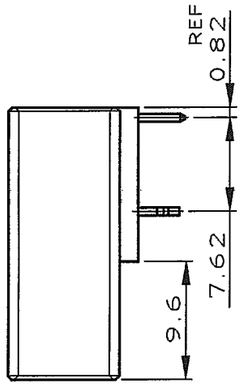

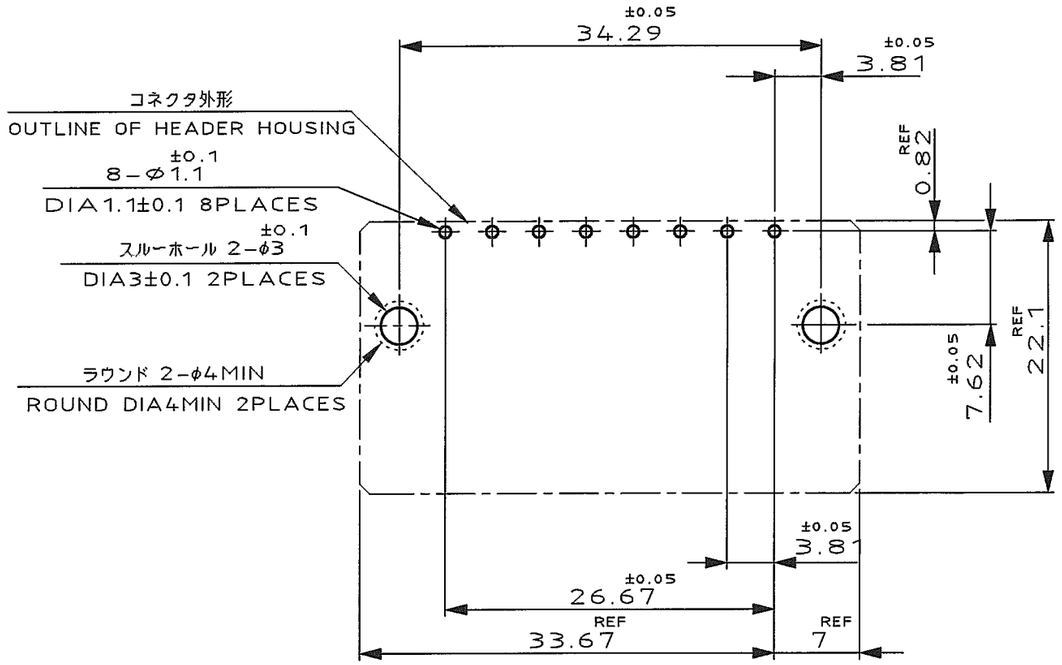

推奨基板取付け穴寸法

PC 基板厚：1.6±0.1
（非累積公差）
（コネクタ搭載面）

RECOMEND PC BOARD HOLE PATTERN

PC BOARD THICKNESS:1.6±0.1
(NOT ACCUMULATE TOLERANCE)
(CONNECTOR MOUNT SIDE)

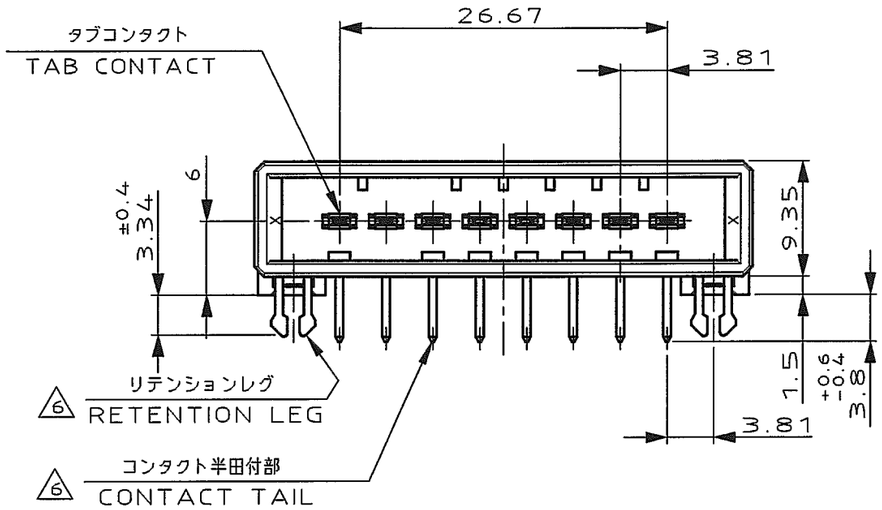

NOTES

1. MATERIAL:HOUSING:GLASS FILED THERMO PLASTIC,POLYESTER
CONTACT:COPPER ALLOY
RETENTION LEG:COPPER ALLOY

2. FINISH(CONTACT AREA): 0.38μm PdNi & Au PLATING OVER NICKEL

3. FINISH(CONTACT AREA): 0.76μm PdNi & Au PLATING OVER NICKEL

4. FINISH(CONTACT AREA):2.0 μmMIN TIN PLATED OVER NICKEL

~~5. FINISH(RETENTION LEG): TIN-LEAD PLATED (CONTACT TAIL) OVER NICKEL~~

6. FINISH(RETENTION LEG): TIN PLATED (CONTACT TAIL) OVER NICKEL

6	4	1-178297-5
6	3	1-178297-3
6	2	1-178297-2
(FINISH)		製品番号 (PART NO.)

LTR	REVISION RECORD	DR	CHK	DATE
C	REVISED PER ECR-25-250788	F.Z	R.B	16JAN 2025
B	REVISED(FJD0-0039-03)	T S	S.A	6/3 '07
A	REVISED(FJD0-0114-03)	T S	SM	25.APR '03
0	PROPOSED	NM	H.O / S.M	7-1 '91

Copyright © 1991
AMP(Japan) LTD.
ALL RIGHTS RESERVED.

TE Connectivity

WIRE RANGE	mm²(AWG -)
INSULATION DIA	- mmφ
MATERIAL	SEE NOTE 注記参照
FINISH	SEE NOTE 注記参照
DR.	N.Matsubara 14 JUN 91
DE.	N.Matsubara 14 JUN 91
CHK.	M.Obata 1 JUL '91
APP.	S.MANABE 1-JUL-'91

NAME: 8 POS SINGLE ROW HORIZONTAL HDR ASS'Y FOR DYNAMIC 3100

一般公差 (GENERAL TOLERANCE): 10以下 ±0.3; 10を超え30以下 ±0.4; 30を超え100以下 ±0.5; 角度 ±3°

SIZE A3 | LOC J | NUMBER C-178297 | SCALE 2-1 | REV. C | SHEET 1 OF 1

DIMENSIONS IN MILLIMETERS. DO NOT SCALE PRINT

PRINT DIST

AMP-J
REV.10/'83

(CUSTOMER DRAWING) 顧客用図面