THIS DRAWING IS UNPUBLISHED. RELEASED FOR PUBLICATION 2007
© COPYRIGHT 2007 BY TYCO ELECTRONICS CORPORATION. ALL RIGHTS RESERVED.

PROJECT NO. EGATN06166 | LOC A1 | DIST –

REVISIONS					
P	LTR	DESCRIPTION	DATE	DWN	APVD
	A	NEW DRAWING PUBLISHED	29MAR2007	LN	AK
	A1	SEE E-08-022852	10SEP2008	SC	VB

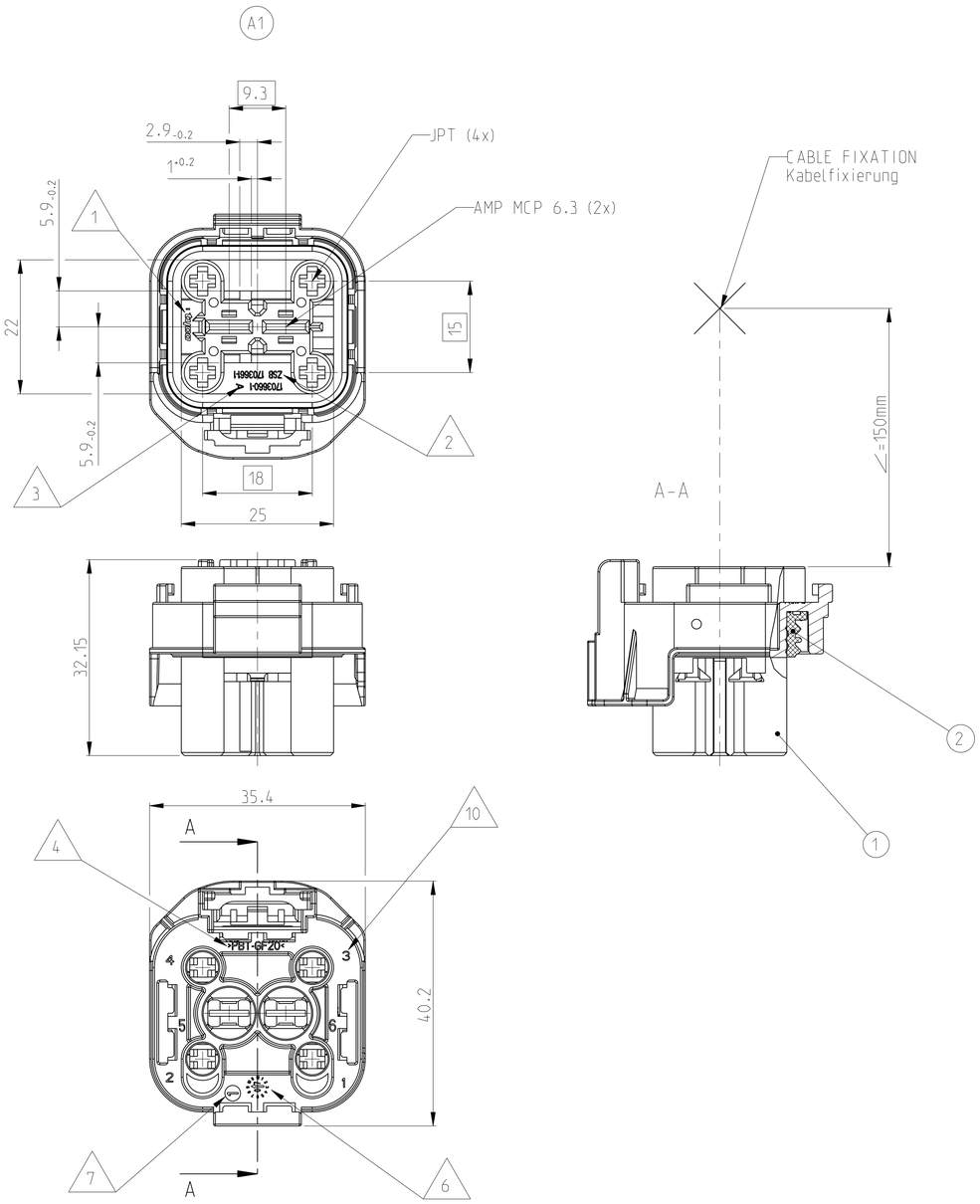

DELIVERY POSITION
Anlieferungszustand

ASSEMBLAGE VERSION WITH CPA
Montageausfuehrung mit Zweitverriegelungsvorrrichtung

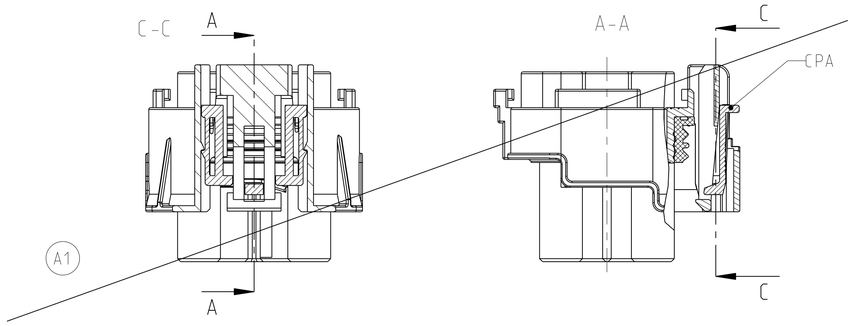

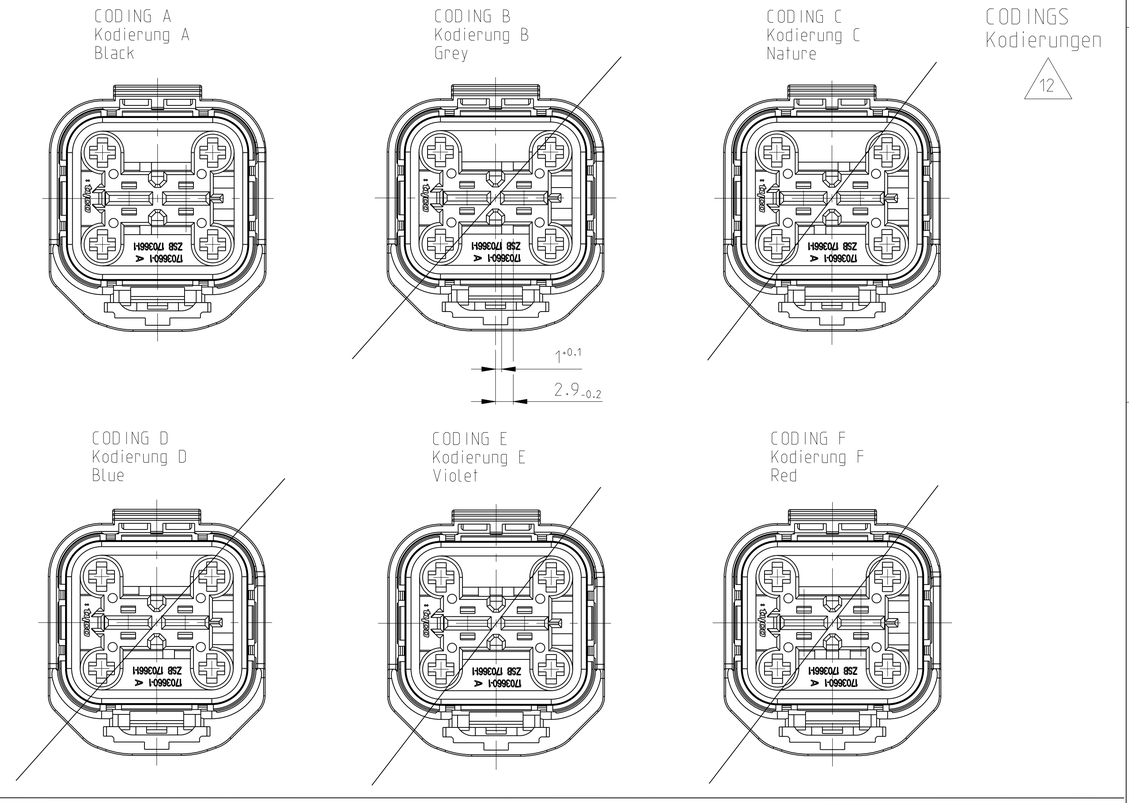

NOTES
BEMERKUNGEN

NV NOTE NOT VALID
Bemerkung nicht verwendet

1 TE-LOGO
TE-Firmenzeichen

2 ORDER NUMBER
Bestell-Nummer

3 REVISION NUMBER
Werkzeug-Aenderungsindex

4 MATERIAL MARKING
Werkstoffkennzeichnung

NV MARKING FOR OPEL SIGN
OPEL-Kurzzeichen

6 PRODUCTION DATE
Produktionsdatum

7 CAVITY MARKING
Nestmarkierung

NV PRE SERIES PART WITH CONDITIONAL RELEASE MARKED WITH CONDITIONING CLOCK INSTEAD OF DATE CLOCK
Vorserienteil mit bedingter Freigabe markiert mit Änderungsuhr anstelle der Datumsuhr
A1

9 LOOSE PARTS PACKAGED IN CARTON
Verpackung, lose im Karton

10 CAVITY IDENTIFICATION
Kammerbezeichnung

A1 NV ATTENTION : PRE-SERIES PART IS MARKED WITH A PINK DOT ! PACKAGING DEPENDS ON ORDER.
Achtung: Vorserienteile sind mit rosa Punkt markiert ! Verpackungseinheit richtet sich nach Auftragsmenge.

A1

0-1241418-4	0-1241419-4	>4-6.0	CuNiSi	TIN PLATED SnAg	0-1719043-1
0-1241416-1	0-1241417-1	>2.5-4.0	CuNiSi	TIN PLATED	0-1394512-1
0-1241414-1	0-1241415-1	>1.0-2.5	CuNiSi	TIN PLATED	0-1394511-1
TE ORDER NO STRIP FORM	TE ORDER NO LOOSE PIECE	WIRE RANGE MM^2	MATERIAL	FINISH	SINGLE WIRE SEAL NO
RECOMMENDED CONTACT SYSTEM: AMP MCP 6.3; SEALED					FLR

0-0964273-1	0-0964287-1	>1.0-2.5	CuFe 2	PRETINNED	0-0963292-1
0-0964286-1	0-0964285-1	0.5-1.0	CuFe 2	PRETINNED	0-0963293-1
0-0964282-1	0-0964281-1	0.35-0.5	CuFe 2	PRETINNED	0-0963294-1
TE ORDER NO STRIP FORM	TE ORDER NO LOOSE PIECE	WIRE RANGE MM^2	MATERIAL	FINISH	SINGLE WIRE SEAL NO
RECOMMENDED CONTACT SYSTEM: JPT- TYPE A; SEALED					FLR

USED WITH :
Verwenden mit :

RETAINER PN 0-1718879-2
2.Kontaktsicherung PN 0-1718879-2

~~COVER PN EGATN03442-058-1~~
~~Kappe PN EGATN03442-058-1~~

A1 13

12

~~A~~	~~0-1703661-2~~	~~A~~	~~B~~	~~2~~	~~1~~	~~14.1~~	~~SEAL Dichtung~~	~~MVQ SHORE 50 A~~	~~NATURE natur~~	~~13~~	~~114-18759-1 COD. B~~	~~4~~
				~~1~~	~~1~~		~~JPT / AMP MCP 6.3-HOUSING, 6POS. JPT / AMP MCP 6.3-Gehaeuse, 6pol.~~	~~PBT-GF20~~	~~GREY Grau~~			~~3~~
ZFW6-44	A	0-1703661-1	A	A	2	1	14.1	SEAL Dichtung	MVQ SHORE 50 A	NATURE natur	13	114-18759-1 COD. A	2
					1	1		JPT / AMP MCP 6.3-HOUSING, 6POS. JPT / AMP MCP 6.3-Gehaeuse, 6pol.	PBT-GF20	BLACK Schwarz			1
CUSTOMER SIGN	VARIANTE	ASS'Y PART-NO.	REV.	COD.	POS.	QTY.	WEIGHT (g)	DESCRIPTION	MATERIAL	FINISH COLOUR	USED WITH	TE-COUNTERPART	ITEM NO.

THIS DRAWING IS A CONTROLLED DOCUMENT FOR TYCO ELECTRONICS CORPORATION IT IS SUBJECT TO CHANGE AND THE CONTROLLING ENGINEERING ORGANIZATION SHOULD BE CONTACTED FOR THE LATEST REVISION.

DWN L. Nguyen 29MAR2007
CHK A. Ketteler 30MAR2007
APVD –
PRODUCT SPEC 108-18974-1
APPLICATION SPEC 114-18686-1
WEIGHT SEE TABLE

DIMENSIONS: mm

TOLERANCES UNLESS OTHERWISE SPECIFIED:
0 PLC ±0.5
1 PLC ±0.5
2 PLC ±0.5
3 PLC ±-
4 PLC ±-
ANGLES ±2°

MATERIAL SEE TABLE –
FINISH SEE TABLE –

Tyco Electronics
tyco Electronics AMP GmbH
D - 64625 Bensheim

NAME JPT/AMP MCP 6.3 HSG, 6POS., ASSY
JPT/AMPMCP 6.3 Gehaeuse, 6pol., ZSB
–

SIZE	CAGE CODE	DRAWING NO	RESTRICTED TO
A1	00779	C-1703661	–

CUSTOMER DRAWING | SCALE 2:1 | SHEET 1 OF 1 | REV A1

AMP 4805 REV 31MAR2000

Pro/ENGINEER DRAWING