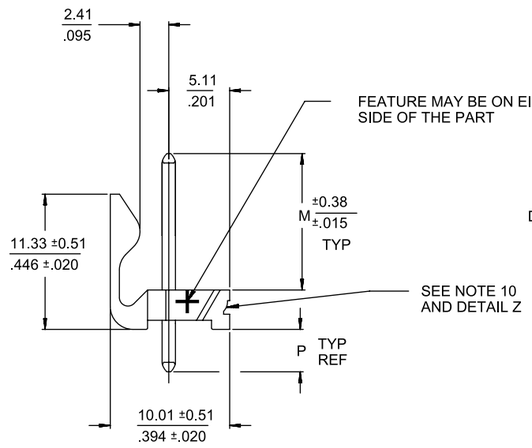

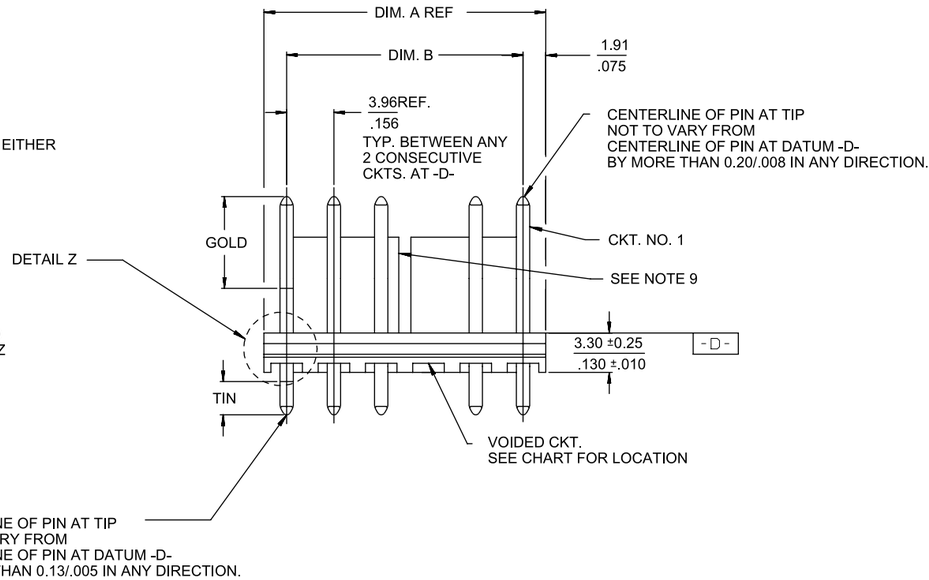

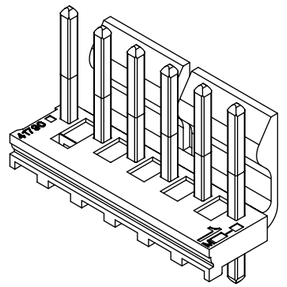

CKT	DIM. A	DIM. B	SLOT LOC BETWEEN CKTS
2	7.77 .306	3.96 ±0.05 .156 ±.002	NONE
3	11.73 .462	7.92 ±0.08 .312 ±.003	NONE
4	15.70 .618	11.89 ±0.08 .468 ±.003	NONE
5	19.66 .774	15.85 ±0.10 .624 ±.004	NONE
6	23.62 .930	19.81 ±0.10 .780 ±.004	3 & 4
7	27.58 1.086	23.77 ±0.10 .936 ±.004	4 & 5
8	31.55 1.242	27.74 ±0.13 1.092 ±.005	4 & 5
9	35.51 1.398	31.70 ±0.13 1.248 ±.005	5 & 6
10	39.47 1.554	35.66 ±0.13 1.404 ±.005	5 & 6
11	43.43 1.710	39.62 ±0.15 1.560 ±.006	6 & 7
12	47.40 1.866	43.59 ±0.15 1.716 ±.006	4 & 5 8 & 9
13	51.36 2.022	47.55 ±0.15 1.872 ±.006	4 & 5 9 & 10
14	55.32 2.178	51.51 ±0.18 2.028 ±.007	5 & 6 9 & 10
15	59.28 2.334	55.47 ±0.18 2.184 ±.007	5 & 6 10 & 11
16	63.25 2.490	59.44 ±0.18 2.340 ±.007	5 & 6 11 & 12
17	67.21 2.646	63.40 ±0.20 2.496 ±.008	6 & 7 11 & 12
18	71.17 2.802	67.36 ±0.20 2.652 ±.008	6 & 7 12 & 13

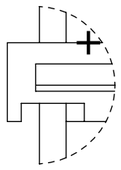

DETAIL Z
SCALE 4:1

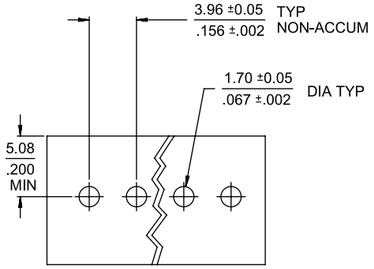

RECOMMENDED P.C.BOARD LAYOUT

NOTES:
1. MATERIAL: HEADER-GLASS FILLED POLYESTER, 94V-0, MOLDED NATURAL (WHITE).
2. FINISH:
   (154-TIN) OVERALL TIN: 0.00254/.000100 MIN.
   OVER 0.00127/.000050 MIN NICKEL.
   (197-TIN) OVERALL REFLOWED MATTE TIN: 0.00152/.000060 MIN.
   OVER 0.00127/.000050 MIN. NICKEL OVERALL.
   (222-TIN) OVERALL MATTE TIN: 0.00254/.000100 MIN.
   OVER 0.00127/.000050 MIN NICKEL.
   (208-15 GOLD) SELECT GOLD: 0.00038/.000015 MIN, SELECT TIN: 0.00254/.000100 MIN,
   OVERALL NICKEL UNDERPLATE: 0.00127/.000050 MIN.
   (228-30 GOLD) SELECT GOLD: 0.00076/.000030 MIN, SELECT TIN: 0.00254/.000100 MIN,
   OVERALL NICKEL UNDERPLATE: 0.00127/.000050 MIN.
   (241-20 GOLD) 0.00051/.000020 MIN.
   SELECT TIN: 0.00254/.000100 MIN.
   OVERALL NICKEL UNDERPLATE: 0.00127/.000050 MIN.
3. PRODUCT SPECIFICATION AND PROCESS PARAMETERS: SEE PS-08-50.
4. PACKAGING INFORMATION: SEE CHARTS.
5. SOLDERABILITY: PER SMES-152.
6. PIN PUSH-OUT FORCE: PRIOR TO SOLDERING, A 3 LB. MINIMUM FORCE (IN EITHER DIRECTION)
7. PARTS ARE STACKABLE END TO END ON 3.96/.156 CENTERS.
8. THIS PART CONFORMS TO CLASS B REQUIREMENTS OF COSMETIC SPECIFICATION PS-45499-002.
9. SLOTS ON BACKWALL ARE BETWEEN CIRCUITS. SEE CHART FOR LOCATION.
10 FEATURE MAY OR MAY NOT EXTEND ACROSS THE ENTIRE FACE OF THE PART "SEE DETAIL Z".

THIS DRAWING CONTAINS INFORMATION THAT IS PROPRIETARY TO MOLEX ELECTRONIC TECHNOLOGIES, LLC AND SHOULD NOT BE USED WITHOUT WRITTEN PERMISSION

FUNCTIONAL SYMBOLS: EA = 0, EC = 0, EP = 0
DIVISIONAL SYMBOLS

DIMENSION UNITS: mm
SCALE: 2:1

GENERAL TOLERANCES (UNLESS SPECIFIED)

	MM	INCH
4 PLACES	±	±
3 PLACES	±	± 0.0100
2 PLACES	± 0.250	± 0.015
1 PLACE	± 0.38	±
0 PLACES	±	±
ANGULAR TOL	± 0.5°	

DRAFT WHERE APPLICABLE MUST REMAIN WITHIN DIMENSIONS

CURRENT REV DESC: New PN added

STATUS: Production
DRWN: VINOTHKUMAR S 2026-06-15
CHK'D: VINOTHKUMAR S 2026-07-07
APPR: Saravanakumar Murugesan 2026-07-07

INITIAL REVISION:
DRWN: KSAMIEC 2002-10-22
APPR: YMARGULI 2002-10-24

THIRD ANGLE PROJECTION | DRAWING: B-SIZE | SERIES: 41791

molex

KK 156 HEADER ASSEMBLY
FRICTION LOCK VERTICAL SOLID BODY W/O PEGS

PRODUCT CUSTOMER DRAWING

DOCUMENT NUMBER	DOC TYPE	DOC PART	REVISION
SDA-41791	PSD	000	R2

MATERIAL NUMBER	CUSTOMER	SHEET NUMBER
	GENERAL MARKET	1 OF 13

FORMAT: Eng-lega-TC-tb-prod-B
REVISION: B
DATE: 2023/10/23

	Group	A-41791-002/0018		Group	A-41791-0019/0035		Group	A-41791-0036/0052		Group	A-41791-0059/0074
	Header No:	41790-0002/0018		Header No:	41790-0002/0018		Header No:	41790-0002/0018		Header No:	41790-0002/0018
	Pin No:	43294-0214		Pin No:	43294-0215		Pin No:	43294-0214		Pin No:	43294-0214
	Plating:	197 – TIN		Plating:	241 – GOLD		Plating:	197 – TIN		Plating:	197 – TIN
	Pin Length L	18.29 / .720		Pin Length L	18.29 / .720		Pin Length L	18.29 / .720		Pin Length L	18.29 / .720
Options	Mating M	11.43 / .450		Mating M	11.43 / .450		Mating M	11.43 / .450		Mating M	11.43 / .450
	Gold Loc G	N/A		Gold Loc G	6.85/.270		Gold Loc G	N/A		Gold Loc G	N/A
	PC Tail P	3.56 / .140		PC Tail P	3.56 / .140		PC Tail P	3.56 / .140		PC Tail P	3.56 / .140
	Tin Loc T	OVERALL		Tin Loc T	OVERALL		Tin Loc T	OVERALL		Tin Loc T	OVERALL
	Voided Ckts	NONE		Voided Ckts	NONE		Voided Ckts	2		Voided Ckts	3
	Pack Per	PK-41791-001		Pack Per	PK-41791-001		Pack Per	PK-41791-001		Pack Per	PK-41791-001
Ckts		Engineer Number		Material No	Engineer Number		Material No	Engineer Number		Material No	Engineer Number
		A-41791-0002		26-61-4020	A-41791-0019		26-62-4020	A-41791-0036			
3	26-60-4030	A-41791-0003		26-61-4030	A-41791-0020		26-62-4030	A-41791-0037		26-62-4036	A-41791-0059
4	26-60-4040	A-41791-0004		26-61-4040	A-41791-0021		26-62-4040	A-41791-0038		26-62-4046	A-41791-0060
5	26-60-4050	A-41791-0005		26-61-4050	A-41791-0022		26-62-4050	A-41791-0039		26-62-4056	A-41791-0061
6	26-60-4060	A-41791-0006		26-61-4060	A-41791-0023		26-62-4060	A-41791-0040		26-62-4066	A-41791-0062
7	26-60-4070	A-41791-0007		26-61-4070	A-41791-0024		26-62-4070	A-41791-0041		26-62-4076	A-41791-0063
8	26-60-4080	A-41791-0008		26-61-4080	A-41791-0025		26-62-4080	A-41791-0042		26-62-4086	A-41791-0064
9	26-60-4090	A-41791-0009		26-61-4090	A-41791-0026		26-62-4090	A-41791-0043		26-62-4096	A-41791-0065
10	26-60-4100	A-41791-0010		26-61-4100	A-41791-0027		26-62-4100	A-41791-0044		26-62-4106	A-41791-0066
11	26-60-4110	A-41791-0011		26-61-4110	A-41791-0028		26-62-4110	A-41791-0045		26-62-4116	A-41791-0067
12	26-60-4120	A-41791-0012		26-61-4120	A-41791-0029		26-62-4120	A-41791-0046		26-62-4126	A-41791-0068
13	26-60-4130	A-41791-0013		26-61-4130	A-41791-0030		26-62-4130	A-41791-0047		26-62-4136	A-41791-0069
14	26-60-4140	A-41791-0014		26-61-4140	A-41791-0031		26-62-4140	A-41791-0048		26-62-4146	A-41791-0070
15	26-60-4150	A-41791-0015		26-61-4150	A-41791-0032		26-62-4150	A-41791-0049		26-62-4156	A-41791-0071
16	26-60-4160	A-41791-0016		26-61-4160	A-41791-0033		26-62-4160	A-41791-0050		26-62-4166	A-41791-0072
17	26-60-4170	A-41791-0017		26-61-4170	A-41791-0034		26-62-4170	A-41791-0051		26-62-4176	A-41791-0073
18	26-60-4180	A-41791-0018		26-61-4180	A-41791-0035		26-62-4180	A-41791-0052		26-62-4186	A-41791-0074
17											

THIS DRAWING CONTAINS INFORMATION THAT IS PROPRIETARY TO MOLEX ELECTRONIC TECHNOLOGIES, LLC AND SHOULD NOT BE USED WITHOUT WRITTEN PERMISSION

FUNCTIONAL SYMBOLS
FA = 0
FC = 0
FP = 0
DIVISIONAL SYMBOLS

DIMENSION UNITS: mm
SCALE: 1:1

GENERAL TOLERANCES (UNLESS SPECIFIED)

ANGULAR TOL	± 0.5°
4 PLACES	±
3 PLACES	±
2 PLACES	± 0.250
1 PLACE	± 0.38
0 PLACES	±

DRAFT WHERE APPLICABLE MUST REMAIN WITHIN DIMENSIONS

CURRENT REV DESC: New PN added

STATUS: Production
DRWN: VINOTHKUMAR S 2026-06-15
CHK'D: VINOTHKUMAR S 2026-07-07
APPR: Saravanakumar Murugesan 2026-07-07

THIRD ANGLE PROJECTION | DRAWING: C-SIZE | SERIES: 41791

molex

KK 156 HEADER ASSEMBLY
FRICTION LOCK VERTICAL SOLID BODY W/O PEGS

PRODUCT CUSTOMER DRAWING

DOCUMENT NUMBER	DOC TYPE	DOC PART	REVISION
SDA-41791	PSD	000	R2

MATERIAL NUMBER	CUSTOMER	SHEET NUMBER
	GENERAL MARKET	2 OF 13

FORMAT: TC-Docs-C
REVISION: B
DATE: 2022/08/01

Options	Group	A-41791-0086/0100		Options	Group	A-41791-0309/0325		Group	A-41791-0464/0480		Group	A-41791-0481/0491
	Header No	41790-0002/0018			Header No	41790-0002/0018		Header No	41790-0002/0018		Header No	41790-0002/0012
	Pin No	43294-0214			Pin No	43294-0215		Pin No	43294-0240		Pin No	43294-0355
	Plating	197-TIN			Plating	241-GOLD		Plating	197-TIN		Plating	154-TIN
	Pin Length L	18.29/.720			Pin Length L	18.29/.720		Pin Length L	19.05/.750		Pin Length L	22.35/.880
	Mating M	11.43/.450			Mating M	11.43/.450		Mating M	11.43/.450		Mating M	11.56/.455
	Gold Loc G	N/A			Gold Loc G	6.85/.270		Gold Loc G	N/A		Gold Loc G	N/A
	PC Tail P	3.56/.140			PC Tail P	3.56/.140		PC Tail P	4.32/.170		PC Tail P	7.49/.295
	Tin Loc T	OVERALL			Tin Loc T	4.06/.160		Tin Loc T	OVERALL		Tin Loc T	OVERALL
	Voided Ckts	2,4			Voided Ckts	2		Voided Ckts	NONE		Voided Ckts	NONE
	Pack Per	PK-41791-001			Pack Per	PK-41791-001		Pack Per	PK-41791-001		Pack Per	PK-41791-002
Ckts	Material No	Engineer Number		Ckts	Material No	Engineer Number		Material No	Engineer Number		Material No	Engineer Number
2				2				26-60-4023	A-41791-0464		41791-0481	A-41791-0481
3				3	26-63-4031	A-41791-0310		26-60-4033	A-41791-0465		41791-0482	A-41791-0482
4	26-62-4041	A-41791-0086		4		A-41791-0311		26-60-4043	A-41791-0466		41791-0483	A-41791-0483
5	26-62-4051	A-41791-0087		5	26-63-4051	A-41791-0312		26-60-4053	A-41791-0467		41791-0484	A-41791-0484
6	26-62-4061	A-41791-0088		6	26-63-4061	A-41791-0313		26-60-4063	A-41791-0468		41791-0485	A-41791-0485
7		A-41791-0089		7	26-63-4071	A-41791-0314		26-60-4073	A-41791-0469		41791-0486	A-41791-0486
8	41791-0090	A-41791-0090		8		A-41791-0315		26-60-4083	A-41791-0470		41791-0487	A-41791-0487
9		A-41791-0091		9		A-41791-0316		26-60-4093	A-41791-0471		41791-0488	A-41791-0488
10	26-62-4101	A-41791-0092		10		A-41791-0317		26-60-4103	A-41791-0472		41791-0489	A-41791-0489
11		A-41791-0093		11		A-41791-0318		26-60-4113	A-41791-0473		41791-0490	A-41791-0490
12		A-41791-0094		12		A-41791-0319		26-60-4123	A-41791-0474		41791-0491	A-41791-0491
13		A-41791-0095		13		A-41791-0320		26-60-4133	A-41791-0475			
14		A-41791-0096		14		A-41791-0321		26-60-4143	A-41791-0476			
15		A-41791-0097		15		A-41791-0322		26-60-4153	A-41791-0477			
16		A-41791-0098		16		A-41791-0323		26-60-4163	A-41791-0478			
17		A-41791-0099		17		A-41791-0324		26-60-4173	A-41791-0479			
18		A-41791-0100		18		A-41791-0325		26-60-4183	A-41791-0480			

THIS DRAWING CONTAINS INFORMATION THAT IS PROPRIETARY TO MOLEX ELECTRONIC TECHNOLOGIES, LLC AND SHOULD NOT BE USED WITHOUT WRITTEN PERMISSION

FUNCTIONAL SYMBOLS
FA = 0
FC = 0
FP = 0
DIVISIONAL SYMBOLS

DIMENSION UNITS: mm
SCALE: 1:1

GENERAL TOLERANCES (UNLESS SPECIFIED)

ANGULAR TOL	± 0.5°
4 PLACES	±
3 PLACES	±
2 PLACES	± 0.250
1 PLACE	± 0.38
0 PLACES	±

DRAFT WHERE APPLICABLE MUST REMAIN WITHIN DIMENSIONS

CURRENT REV DESC: New PN added

STATUS: Production
DRWN: VINOTHKUMAR S 2026-06-15
CHK'D: VINOTHKUMAR S 2026-07-07
APPR: Saravanakumar Murugesan 2026-07-07

THIRD ANGLE PROJECTION | DRAWING: C-SIZE | SERIES: 41791

molex

KK 156 HEADER ASSEMBLY
FRICTION LOCK VERTICAL SOLID BODY W/O PEGS

PRODUCT CUSTOMER DRAWING

DOCUMENT NUMBER	DOC TYPE	DOC PART	REVISION
SDA-41791	PSD	000	R2

MATERIAL NUMBER	CUSTOMER	SHEET NUMBER
	GENERAL MARKET	3 OF 13

Options	Group	A-41791-0583/0597		Group	A-41791-0598/0609		Group	A-41791-0638/0653		Group	A-41791-0773/0785
	Header No	41790-0002/0018		Header No	41790-0002/0018		Header No	41790-0002/0018		Header No	41790-0006/0018
	Pin No	43294-0214		Pin No	43294-0214		Pin No	43294-0215		Pin No	43294-0214
	Plating	197-TIN		Plating	197-TIN		Plating	241-GOLD		Plating	197-TIN
	Pin Length L	18.29/.720		Pin Length L	18.29/.720		Pin Length L	18.29/.720		Pin Length L	18.29/.720
	Mating M	11.43/.450		Mating M	11.43/.450		Mating M	11.43/.450		Mating M	11.43/.450
	Gold Loc G	N/A		Gold Loc G	N/A		Gold Loc G	6.85/.270		Gold Loc G	N/A
	PC Tail P	3.56/.140		PC Tail P	3.56/.140		PC Tail P	3.56/.140		PC Tail P	3.56/.140
	Tin Loc T	OVERALL		Tin Loc T	OVERALL		Tin Loc T	4.06/.160		Tin Loc T	OVERALL
	Voided Ckts	4		Voided Ckts	7		Voided Ckts	3		Voided Ckts	3,6
	Pack Per	PK-41791-001		Pack Per	PK-41791-001		Pack Per	PK-41791-001		Pack Per	PK-41791-001
Ckts	Material No	Engineer Number		Material No	Engineer Number		Material No	Engineer Number		Item Number	
2											
3							26-63-4032	A-41791-0638			
4	27-62-4049	A-41791-0583					41791-0639	A-41791-0639			
5	27-62-4059	A-41791-0584					26-63-4052	A-41791-0640			
6	27-62-4069	A-41791-0585					26-63-4062	A-41791-0641			
7	27-62-4079	A-41791-0586		41791-0598	A-41791-0598		41791-0642	A-41791-0642		41791-0774	
8	27-62-4089	A-41791-0587		41791-0599	A-41791-0599		26-63-4082	A-41791-0643			
9	27-62-4099	A-41791-0588		27-66-4090	A-41791-0600		41791-0644	A-41791-0644			
10	27-62-4109	A-41791-0589		41791-0601	A-41791-0601		41791-0645	A-41791-0645			
11	27-62-4119	A-41791-0590		41791-0602	A-41791-0602		41791-0646	A-41791-0646			
12	27-62-4129	A-41791-0591		41791-0603	A-41791-0603		41791-0647	A-41791-0647			
13	27-62-4139	A-41791-0592		41791-0604	A-41791-0604		41791-0648	A-41791-0648			
14	27-62-4149	A-41791-0593		41791-0605	A-41791-0605		41791-0649	A-41791-0649			
15	27-62-4159	A-41791-0594		41791-0606	A-41791-0606		41791-0650	A-41791-0650			
16	27-62-4169	A-41791-0595		41791-0607	A-41791-0607		41791-0651	A-41791-0651			
17	27-62-4179	A-41791-0596		41791-0608	A-41791-0608		41791-0652	A-41791-0652			
18	27-62-4189	A-41791-0597		41791-0609	A-41791-0609		41791-0653	A-41791-0653			

THIS DRAWING CONTAINS INFORMATION THAT IS PROPRIETARY TO MOLEX ELECTRONIC TECHNOLOGIES, LLC AND SHOULD NOT BE USED WITHOUT WRITTEN PERMISSION

FUNCTIONAL SYMBOLS
FA = 0
FC = 0
FP = 0
DIVISIONAL SYMBOLS

DIMENSION UNITS	SCALE
mm	1:1

GENERAL TOLERANCES (UNLESS SPECIFIED)

ANGULAR TOL	± 0.5°
4 PLACES	±
3 PLACES	±
2 PLACES	± 0.250
1 PLACE	± 0.38
0 PLACES	±

DRAFT WHERE APPLICABLE MUST REMAIN WITHIN DIMENSIONS

CURRENT REV DESC: New PN added

STATUS: Production
DRWN: VINOTHKUMAR S 2026-06-15
CHK'D: VINOTHKUMAR S 2026-07-07
APPR: Saravanakumar Murugesan 2026-07-07

THIRD ANGLE PROJECTION | DRAWING: C-SIZE | SERIES: 41791

molex

KK 156 HEADER ASSEMBLY
FRICTION LOCK VERTICAL SOLID BODY W/O PEGS

PRODUCT CUSTOMER DRAWING

DOCUMENT NUMBER	DOC TYPE	DOC PART	REVISION
SDA-41791	PSD	000	R2

MATERIAL NUMBER	CUSTOMER	SHEET NUMBER
	GENERAL MARKET	4 OF 13

FORMAT: TC-tb-prod-C
REVISION: R
DATE: 2022/08/01

Options	Group	A-41791-0815/0831		Group	A-41791-0832/0848		Group	A-41791-0849/0865		Group	A-41791-0883/0891
	Header No	41790-0002/0018		Header No	41790-0002/0018		Header No	41790-0002/0018		Header No	41790-0010/0018
	Pin No	43294-0661		Pin No	43294-0209		Pin No	43294-0210		Pin No	43294-0214
	Plating	197-TIN		Plating	208-15 GOLD		Plating	228-30 GOLD		Plating	197-TIN
	Pin Length L	30.48/1.200		Pin Length L	18.29/.720		Pin Length L	18.29/.720		Pin Length L	18.29/.720
	Mating M	11.43/.450		Mating M	11.43/.450		Mating M	11.43/.450		Mating M	11.43/.450
	Gold Loc G	N/A		Gold Loc G	6.86/.270		Gold Loc G	6.86/.270		Gold Loc G	N/A
	PC Tail P	15.75/.620		PC Tail P	3.56/.140		PC Tail P	3.56/.140		PC Tail P	3.56/.140
	Tin Loc T	OVERALL		Tin Loc T	4.06/.160		Tin Loc T	4.06/.160		Tin Loc T	OVERALL
	Voided Ckts	NONE		Voided Ckts	NONE		Voided Ckts	NONE		Voided Ckts	10
	Pack Per	PK-41791-003		Pack Per	PK-41791-001		Pack Per	PK-41791-001		Pack Per	PK-41791-001
Ckts	Item Number			Material No	Engineer Number		Material No	Engineer Number		Item Number	
2	41791-0815			41791-0832	A-41791-0832		41791-0849	A-41791-0849			
3	41791-0816			41791-0833	A-41791-0833		41791-0850	A-41791-0850			
4	41791-0817			41791-0834	A-41791-0834		41791-0851	A-41791-0851			
5	41791-0818			41791-0835	A-41791-0835		41791-0852	A-41791-0852			
6	41791-0819			41791-0836	A-41791-0836		41791-0853	A-41791-0853			
7	41791-0820			41791-0837	A-41791-0837		41791-0854	A-41791-0854			
8	41791-0821			41791-0838	A-41791-0838		41791-0855	A-41791-0855			
9	41791-0822			41791-0839	A-41791-0839		41791-0856	A-41791-0856			
10	41791-0823			41791-0840	A-41791-0840		41791-0857	A-41791-0857		41791-0883	
11	41791-0824			41791-0841	A-41791-0841		41791-0858	A-41791-0858		41791-0884	
12	41791-0825			41791-0842	A-41791-0842		41791-0859	A-41791-0859		41791-0885	
13	41791-0826			41791-0843	A-41791-0843		41791-0860	A-41791-0860		41791-0886	
14	41791-0827			41791-0844	A-41791-0844		41791-0861	A-41791-0861		41791-0887	
15	41791-0828			41791-0845	A-41791-0845		41791-0862	A-41791-0862		41791-0888	
16	41791-0829			41791-0846	A-41791-0846		41791-0863	A-41791-0863		41791-0889	
17	41791-0830			41791-0847	A-41791-0847		41791-0864	A-41791-0864		41791-0890	
18	41791-0831			41791-0848	A-41791-0848		41791-0865	A-41791-0865		41791-0891	

THIS DRAWING CONTAINS INFORMATION THAT IS PROPRIETARY TO MOLEX ELECTRONIC TECHNOLOGIES, LLC AND SHOULD NOT BE USED WITHOUT WRITTEN PERMISSION

FUNCTIONAL SYMBOLS
FA = 0
FC = 0
FP = 0
DIVISIONAL SYMBOLS

DIMENSION UNITS: mm
SCALE: 1:1

GENERAL TOLERANCES (UNLESS SPECIFIED)

ANGULAR TOL	± 0.5°
4 PLACES	±
3 PLACES	±
2 PLACES	± 0.250
1 PLACE	± 0.38
0 PLACES	±

DRAFT WHERE APPLICABLE MUST REMAIN WITHIN DIMENSIONS

CURRENT REV DESC: New PN added

STATUS: Production
DRWN: VINOTHKUMAR S 2026-06-15
CHK'D: VINOTHKUMAR S 2026-07-07
APPR: Saravanakumar Murugesan 2026-07-07

THIRD ANGLE PROJECTION | DRAWING: C-SIZE | SERIES: 41791

molex

KK 156 HEADER ASSEMBLY
FRICTION LOCK VERTICAL SOLID BODY W/O PEGS

PRODUCT CUSTOMER DRAWING

DOCUMENT NUMBER	DOC TYPE	DOC PART	REVISION
SDA-41791	PSD	000	R2

MATERIAL NUMBER	CUSTOMER	SHEET NUMBER
	GENERAL MARKET	5 OF 13

Options	Group	A-41791-0892/0908		Group	A-41791-0922/0933		Group	41791-0934/0948		Group	41791-0966/0976
	Header No	41790-0002/0018		Header No	41790-0007/0018		Header No	41790-0004/0018		Header No	41790-0007/0018
	Pin No	43294-0209		Pin No	43294-0214		Pin No	43294-0209		Pin No	43294-0214
	Plating	208-15 GOLD		Plating	197-TIN		Plating	208-15 GOLD		Plating	197-TIN
	Pin Length L	20.83/.820		Pin Length L	18.29/.720		Pin Length L	18.29/.720		Pin Length L	18.29/.720
	Mating M	11.43/.450		Mating M	11.43/.450		Mating M	11.43/.450		Mating M	11.43/.450
	Gold Loc G	6.83/.270		Gold Loc G	N/A		Gold Loc G	6.86/.270		Gold Loc G	N/A
	PC Tail P	6.10/.240		PC Tail P	3.56/.140		PC Tail P	3.56/.140		PC Tail P	3.56/.140
	Tin Loc T	6.35/.250		Tin Loc T	OVERALL		Tin Loc T	4.06/.160		Tin Loc T	OVERALL
	Voided Ckts	NONE		Voided Ckts	5,7		Voided Ckts	4		Voided Ckts	3,7,8
	Pack Per	PK-41791-002		Pack Per	PK-41791-001		Pack Per	PK-41791-001		Pack Per	PK-41791-001
Ckts	Item Number			Item Number			Item Number			Item Number	
2	41791-0892										
3	41791-0893										
4	41791-0894						41791-0934				
5	41791-0895						41791-0935				
6	41791-0896						41791-0936				
7	41791-0897			41791-0922			41791-0937				
8	41791-0898			41791-0923			41791-0938			41791-0966	
9	41791-0899			41791-0924			41791-0939			41791-0967	
10	41791-0900			41791-0925			41791-0940			41791-0968	
11	41791-0901			41791-0926			41791-0941			41791-0969	
12	41791-0902			41791-0927			41791-0942			41791-0970	
13	41791-0903			41791-0928			41791-0943			41791-0971	
14	41791-0904			41791-0929			41791-0944			41791-0972	
15	41791-0905			41791-0930			41791-0945			41791-0973	
16	41791-0906			41791-0931			41791-0946			41791-0974	
17	41791-0907			41791-0932			41791-0947			41791-0975	
18	41791-0908			41791-0933			41791-0948			41791-0976	

THIS DRAWING CONTAINS INFORMATION THAT IS PROPRIETARY TO MOLEX ELECTRONIC TECHNOLOGIES, LLC AND SHOULD NOT BE USED WITHOUT WRITTEN PERMISSION

FUNCTIONAL SYMBOLS
FA = 0
FC = 0
FP = 0
DIVISIONAL SYMBOLS

DIMENSION UNITS	SCALE
mm	1:1

GENERAL TOLERANCES (UNLESS SPECIFIED)

ANGULAR TOL	± 0.5°
4 PLACES	±
3 PLACES	±
2 PLACES	± 0.250
1 PLACE	± 0.38
0 PLACES	±

DRAFT WHERE APPLICABLE MUST REMAIN WITHIN DIMENSIONS

CURRENT REV DESC: New PN added

STATUS: Production
DRWN: VINOTHKUMAR S 2026-06-15
CHK'D: VINOTHKUMAR S 2026-07-07
APPR: Saravanakumar Murugesan 2026-07-07

THIRD ANGLE PROJECTION | DRAWING: C-SIZE | SERIES: 41791

molex

KK 156 HEADER ASSEMBLY
FRICTION LOCK VERTICAL SOLID BODY W/O PEGS

PRODUCT CUSTOMER DRAWING

DOCUMENT NUMBER	DOC TYPE	DOC PART	REVISION
SDA-41791	PSD	000	R2

MATERIAL NUMBER	CUSTOMER	SHEET NUMBER
	GENERAL MARKET	6 OF 13

FORMAT: TC-tb-prod-C
REVISION: R
DATE: 2022/08/01

Options	Group	41791-0977/0993		Group	41791-0994/1002		Group	A-41791-1036/1048		Group	A-41791-1049/1062
	Header No	41790-0002/0018		Header No	41790-0010/0018		Header No	41790-0006/0018		Header No	41790-0005/0018
	Pin No	43294-0345		Pin No	43294-0209		Pin No	43294-0214		Pin No	43294-0214
	Plating	228-30 GOLD		Plating	208-15 GOLD		Plating	197-TIN		Plating	197-TIN
	Pin Length L	22.10/.870		Pin Length	18.29/.720		Pin Length	18.29/.720		Pin Length	18.29/.720
	Mating M	11.43/.450		Mating	11.43/.450		Mating	11.43/.450		Mating	11.43/.450
	Gold Loc G	10.02/.400		Gold Loc	6.86/.270		Gold Loc	N/A		Gold Loc	N/A
	PC Tail P	7.37/.290		PC Tail	3.56/.140		PC Tail	3.56/.140		PC Tail	3.56/.140
	Tin Loc T	5.08/.200		Tin Loc	4.06/.160		Tin Loc	OVERALL		Tin Loc	OVERALL
	Voided Ckts	NONE		Voided	3,4,5,8,9,10		Voided	4,6		Voided	2,5
	Pack Per	PK-41791-002		Pack Per	PK-41791-001		Pack Per	PK-41791-001		Pack Per	PK-41791-001
Ckts	Item Number			Item Number			Material No	Engineer Number		Item Number	
2	41791-0977										
3	41791-0978										
4	41791-0979										
5	41791-0980										
6	41791-0981							A-41791-1036			
7	41791-0982						41791-1037	A-41791-1037		41791-1051	
8	41791-0983						41791-1038	A-41791-1038			
9	41791-0984							A-41791-1039			
10	41791-0985			41791-994				A-41791-1040			
11	41791-0986			41791-995				A-41791-1041			
12	41791-0987			41791-996				A-41791-1042			
13	41791-0988			41791-997				A-41791-1043			
14	41791-0989			41791-998				A-41791-1044			
15	41791-0990			41791-999				A-41791-1045			
16	41791-0991			41791-1000				A-41791-1046			
17	41791-0992			41791-1001				A-41791-1047			
18	41791-0993			41791-1002				A-41791-1048			

THIS DRAWING CONTAINS INFORMATION THAT IS PROPRIETARY TO MOLEX ELECTRONIC TECHNOLOGIES, LLC AND SHOULD NOT BE USED WITHOUT WRITTEN PERMISSION

FUNCTIONAL SYMBOLS
FA = 0
FC = 0
FP = 0
DIVISIONAL SYMBOLS

DIMENSION UNITS: mm
SCALE: 1:1

GENERAL TOLERANCES (UNLESS SPECIFIED)

ANGULAR TOL	± 0.5°
4 PLACES	±
3 PLACES	±
2 PLACES	± 0.250
1 PLACE	± 0.38
0 PLACES	±

DRAFT WHERE APPLICABLE MUST REMAIN WITHIN DIMENSIONS

CURRENT REV DESC: New PN added

STATUS: Production
DRWN: VINOTHKUMAR S 2026-06-15
CHK'D: VINOTHKUMAR S 2026-07-07
APPR: Saravanakumar Murugesan 2026-07-07

THIRD ANGLE PROJECTION | DRAWING: C-SIZE | SERIES: 41791

molex

KK 156 HEADER ASSEMBLY
FRICTION LOCK VERTICAL SOLID BODY W/O PEGS

PRODUCT CUSTOMER DRAWING

DOCUMENT NUMBER	DOC TYPE	DOC PART	REVISION
SDA-41791	PSD	000	R2

MATERIAL NUMBER	CUSTOMER	SHEET NUMBER
	GENERAL MARKET	7 OF 13

FORMAT: TC-tb-prod-C
REVISION: B
DATE: 2022/08/01

Options	Group	A-41791-1063/1071		Group	A-41791-1074/1088		Group	A-41791-1089 / 1105		Group	A-41791-1107
	Header No	41790-0010/0018		Header No:	41790-0004/0018		Header No:	41790-0002 / 0018		Header No:	41790-0006 / 0018
	Pin No	43294-0214		Pin No:	43294-0215		Pin No:	43294-0212		Pin No:	43294-0213
	Plating	197-TIN		Plating:	241 – GOLD		Plating:	222 – TIN		Plating:	154 – TIN
	Pin Length	18.29/.720		Pin Length L	18.29 / .720		Pin Length L	18.29 / .720		Pin Length L	18.29 / .720
	Mating	11.43/.450		Mating M	11.43 / .450		Mating M	11.43 / .450		Mating M	11.43 / .450
	Gold Loc	N/A		Gold Loc G	6.85/ .270		Gold Loc G	N/A		Gold Loc G	N/A
	PC Tail	3.56/.140		PC Tail P	3.56 / .140		PC Tail P	3.56 / .140		PC Tail P	3.56 / .140
	Tin Loc	OVERALL		Tin Loc T	4.06/.160		Tin Loc T	OVERALL		Tin Loc T	OVERALL
	Voided	5,10		Voided Ckts	2, 3, 4		Voided Ckts	NONE		Voided Ckts	6
	Pack Per	PK-41791-001		Pack Per	PK-41791-001		Pack Per	PK-41791-001		Pack Per	PK-41791-001
Ckts	Item Number			Item Number			Item Number			Item Number	
2							41791-1089				
3							41791-1090				
4							41791-1091				
5				41791-1075							
6							41791-1093				
7										41791-1107	
8							41791-1095				
9							41791-1096				
10							41791-1097				
11	41791-1064						41791-1098				
12							41791-1099				
13											
14											
15											
16							41791-1103				
17											
18							41791-1105				

THIS DRAWING CONTAINS INFORMATION THAT IS PROPRIETARY TO MOLEX ELECTRONIC TECHNOLOGIES, LLC AND SHOULD NOT BE USED WITHOUT WRITTEN PERMISSION

FUNCTIONAL SYMBOLS
FA = 0
FC = 0
FP = 0
DIVISIONAL SYMBOLS

DIMENSION UNITS: mm
SCALE: 1:1

GENERAL TOLERANCES (UNLESS SPECIFIED)

ANGULAR TOL	± 0.5°
4 PLACES	±
3 PLACES	±
2 PLACES	± 0.250
1 PLACE	± 0.38
0 PLACES	±

DRAFT WHERE APPLICABLE MUST REMAIN WITHIN DIMENSIONS

CURRENT REV DESC: New PN added

STATUS: Production
DRWN: VINOTHKUMAR S 2026-06-15
CHK'D: VINOTHKUMAR S 2026-07-07
APPR: Saravanakumar Murugesan 2026-07-07

THIRD ANGLE PROJECTION | DRAWING: C-SIZE | SERIES: 41791

molex

KK 156 HEADER ASSEMBLY
FRICTION LOCK VERTICAL SOLID BODY W/O PEGS

PRODUCT CUSTOMER DRAWING

DOCUMENT NUMBER	DOC TYPE	DOC PART	REVISION
SDA-41791	PSD	000	R2

MATERIAL NUMBER	CUSTOMER	SHEET NUMBER
	GENERAL MARKET	8 OF 13

FORMAT: TC-tb-prod-C
REVISION: B
DATE: 2022/08/01

Options	Group	A-41791-1120		Group	A-41791-1134		Group	A-41791-1150		Group	A-41791-1165
	Header No:	41790-0006		Header No	41790-0004		Header No	41790-0005		Header No	41790-0006
	Pin No:	43294-0213		Pin No	43294-0213		Pin No	43294-0210		Pin No	43294-0239
	Plating:	154 – TIN		Plating	154-TIN		Plating	228-30 GOLD		Plating	154-TIN
	Pin Length L	18.29 / .720		Pin Length L	18.29/.720		Pin Length L	18.29/.720		Pin Length L	19.05/.750
	Mating M	11.43 / .450		Mating M	11.43/.450		Mating M	11.43/.450		Mating M	11.43/.450
	Gold Loc G	N/A		Gold Loc G	N/A		Gold Loc G	6.85/.270		Gold Loc G	N/A
	PC Tail P	3.56 / .140		PC Tail P	3.56/.140		PC Tail P	3.56/.140		PC Tail P	4.32/.170
	Tin Loc T	OVERALL		Tin Loc T	OVERALL		Tin Loc T	4.06/.160		Tin Loc T	OVERALL
	Voided Ckts	2, 5		Voided Ckts	2,3		Voided Ckts	2,4		Voided Ckts	2,3,5
	Pack Per	PK-41791-001		Pack Per	PK-41791-001		Pack Per	PK-41791-001		Pack Per	PK-41791-001
Ckts	Item Number			Item Number			Item Number			Item Number	
2											
3											
4				41791-1134							
5							41791-1150				
6	41791-1120									41791-1165	
7											
8											
9											
10											
11											
12											
13											
14											
15											
16											
17											
18											

THIS DRAWING CONTAINS INFORMATION THAT IS PROPRIETARY TO MOLEX ELECTRONIC TECHNOLOGIES, LLC AND SHOULD NOT BE USED WITHOUT WRITTEN PERMISSION

FUNCTIONAL SYMBOLS
FA = 0
FC = 0
FP = 0
DIVISIONAL SYMBOLS

DIMENSION UNITS	SCALE
mm	1:1

GENERAL TOLERANCES (UNLESS SPECIFIED)

ANGULAR TOL	± 0.5°
4 PLACES	±
3 PLACES	±
2 PLACES	± 0.250
1 PLACE	± 0.38
0 PLACES	±

DRAFT WHERE APPLICABLE MUST REMAIN WITHIN DIMENSIONS

CURRENT REV DESC: New PN added

STATUS: Production
DRWN: VINOTHKUMAR S 2026-06-15
CHK'D: VINOTHKUMAR S 2026-07-07
APPR: Saravanakumar Murugesan 2026-07-07

THIRD ANGLE PROJECTION | DRAWING: C-SIZE | SERIES: 41791

molex

KK 156 HEADER ASSEMBLY
FRICTION LOCK VERTICAL SOLID BODY W/O PEGS

PRODUCT CUSTOMER DRAWING

DOCUMENT NUMBER	DOC TYPE	DOC PART	REVISION
SDA-41791	PSD	000	R2

MATERIAL NUMBER	CUSTOMER	SHEET NUMBER
	GENERAL MARKET	9 OF 13

FORMAT: TC-tb-prod-C
REVISION: R
DATE: 2022/08/01

Options	Group	A-41791-1179		Group	A-41791-1189		Group	A-41791-1203		Group	A-41791-1215
	Header No	41790-0008/0018		Header No	41790-0006/0018		Header No	41790-0009/0018		Header No	41790-0006/0018
	Pin No	43294-0214		Pin No	43294-0240		Pin No	43294-0240		Pin No	43294-0240
	Plating	197-TIN		Plating	197-TIN		Plating	197-TIN		Plating	197-TIN
	Pin Length L	18.29/.720		Pin Length L	19.05/.750		Pin Length L	19.05/.750		Pin Length L	19.05/.750
	Mating M	11.43/.450		Mating M	11.43/.450		Mating M	11.43/.450		Mating M	11.43/.450
	Gold Loc G	N/A		Gold Loc G	N/A		Gold Loc G	N/A		Gold Loc G	N/A
	PC Tail P	3.56/.140		PC Tail P	4.32/.170		PC Tail P	4.32/.170		PC Tail P	4.32/.170
	Tin Loc T	OVERALL		Tin Loc T	OVERALL		Tin Loc T	OVERALL		Tin Loc T	OVERALL
	Voided Ckts	2,4,8		Voided Ckts	2,3,4,5		Voided Ckts	4,5,7,9		Voided Ckts	2,4,6
	Pack Per	PK-41791-001		Pack Per	PK-41791-001		Pack Per	PK-41791-001		Pack Per	PK-41791-001
Ckts	Item Number			Item Number			Item Number			Item Number	
2											
3											
4											
5											
6				41791-1189							
7											
8											
9	41791-1179									41791-1215	
10							41791-1203				
11											
12											
13											
14											
15											
16											
17											
18											

THIS DRAWING CONTAINS INFORMATION THAT IS PROPRIETARY TO MOLEX ELECTRONIC TECHNOLOGIES, LLC AND SHOULD NOT BE USED WITHOUT WRITTEN PERMISSION

FUNCTIONAL SYMBOLS
FA = 0
FC = 0
FP = 0

DIVISIONAL SYMBOLS

DIMENSION UNITS	SCALE
mm	1:1

GENERAL TOLERANCES (UNLESS SPECIFIED)

ANGULAR TOL	± 0.5°
4 PLACES	±
3 PLACES	±
2 PLACES	± 0.250
1 PLACE	± 0.38
0 PLACES	±

DRAFT WHERE APPLICABLE MUST REMAIN WITHIN DIMENSIONS

CURRENT REV DESC: New PN added

STATUS: Production
DRWN: VINOTHKUMAR S 2026-06-15
CHK'D: VINOTHKUMAR S 2026-07-07
APPR: Saravanakumar Murugesan 2026-07-07

THIRD ANGLE PROJECTION | DRAWING: C-SIZE | SERIES: 41791

molex

KK 156 HEADER ASSEMBLY
FRICTION LOCK VERTICAL SOLID BODY W/O PEGS

PRODUCT CUSTOMER DRAWING

DOCUMENT NUMBER	DOC TYPE	DOC PART	REVISION
SDA-41791	PSD	000	R2

MATERIAL NUMBER	CUSTOMER	SHEET NUMBER
	GENERAL MARKET	10 OF 13

FORMAT TC-dvprod-C
REVISION: B
DATE: 2022/08/01

Options	Group	A-41791-1228		Group	A-41791-1240		Group	A-41791-1256		Group	A-41791-1264/1274
	Header No	41790-0005/0018		Header No	41790-0007		Header No	41790-0012		Header No	41790-0004/0014
	Pin No	43294-0214		Pin No	43294-0214		Pin No	43294-0214		Pin No	43294-0214
	Plating	197-TIN		Plating	197-TIN		Plating	197-TIN		Plating	197-TIN
	Pin Length L	18.29/.720		Pin Length L	18.29/.720		Pin Length L	18.29/.720		Pin Length L	18.29/.720
	Mating M	11.43/.450		Mating M	11.43/.450		Mating M	11.43/.450		Mating M	11.43/.450
	Gold Loc G	N/A		Gold Loc G	N/A		Gold Loc G	N/A		Gold Loc G	N/A
	PC Tail P	3.56/.140		PC Tail P	3.56/.140		PC Tail P	3.56/.140		PC Tail P	3.56/.140
	Tin Loc T	OVERALL		Tin Loc T	OVERALL		Tin Loc T	OVERALL		Tin Loc T	OVERALL
	Voided Ckts	4,5		Voided Ckts	2,3,5,6		Voided Ckts	8		Voided Ckts	2,3
	Pack Per	PK-41791-001		Pack Per	PK-41791-001		Pack Per	PK-41791-001		Pack Per	PK-41791-001
Ckts	Item Number			Item Number			Item Number			Item Number	
2											
3											
4										41791-1264	
5											
6											
7				41791-1240							
8	41791-1228										
9											
10											
11											
12							41791-1256				
13											
14										41791-1274	
15											
16											
17											
18											

FUNCTIONAL SYMBOLS
FA = 0
FC = 0
FP = 0
DIVISIONAL SYMBOLS

THIS DRAWING CONTAINS INFORMATION THAT IS PROPRIETARY TO MOLEX ELECTRONIC TECHNOLOGIES, LLC AND SHOULD NOT BE USED WITHOUT WRITTEN PERMISSION

DIMENSION UNITS: mm
SCALE: 1:1

GENERAL TOLERANCES (UNLESS SPECIFIED)

ANGULAR TOL	± 0.5°
4 PLACES	±
3 PLACES	±
2 PLACES	± 0.250
1 PLACE	± 0.38
0 PLACES	±

DRAFT WHERE APPLICABLE MUST REMAIN WITHIN DIMENSIONS

CURRENT REV DESC: New PN added

STATUS: Production
DRWN: VINOTHKUMAR S 2026-06-15
CHK'D: VINOTHKUMAR S 2026-07-07
APPR: Saravanakumar Murugesan 2026-07-07

THIRD ANGLE PROJECTION | DRAWING: C-SIZE | SERIES: 41791

molex

KK 156 HEADER ASSEMBLY
FRICTION LOCK VERTICAL SOLID BODY W/O PEGS

PRODUCT CUSTOMER DRAWING

DOCUMENT NUMBER	DOC TYPE	DOC PART	REVISION
SDA-41791	PSD	000	R2

MATERIAL NUMBER	CUSTOMER	SHEET NUMBER
	GENERAL MARKET	11 OF 13

FORMAT TC-tbprod-C
REVISION: B
DATE: 2022/08/01

Options	Group	A-41791-1285		Group	A-41791-1307/1316		Group	A-41791-1318		Group	A-41791-1333
	Header No	41790-0017		Header No	41790-0009/0018		Header No	41790-0005		Header No	41790-0007
	Pin No	43294-0214		Pin No	43294-0214		Pin No	43294-0214		Pin No	43294-0214
	Plating	197-TIN		Plating	197-TIN		Plating	197-TIN		Plating	197-TIN
	Pin Length L	18.29/.720		Pin Length L	18.29/.720		Pin Length L	18.29/.720		Pin Length L	18.29/.720
	Mating M	11.43/.450		Mating M	11.43/.450		Mating M	11.43/.450		Mating M	11.43/.450
	Gold Loc G	N/A		Gold Loc G	N/A		Gold Loc G	N/A		Gold Loc G	N/A
	PC Tail P	3.56/.140		PC Tail P	3.56/.140		PC Tail P	3.56/.140		PC Tail P	3.56/.140
	Tin Loc T	OVERALL		Tin Loc T	OVERALL		Tin Loc T	OVERALL		Tin Loc T	OVERALL
	Voided Ckts	11		Voided Ckts	5,9		Voided Ckts	2,3,4		Voided Ckts	3,5,6
	Pack Per	PK-41791-001		Pack Per	PK-41791-001		Pack Per	PK-41791-001		Pack Per	PK-41791-001
Ckts	Item Number			Item Number			Item Number			Item Number	
2											
3											
4											
5							41791-1318				
6											
7										41791-1333	
8											
9											
10											
11											
12											
13											
14				41791-1312							
15											
16											
17	41791-1285										
18											

THIS DRAWING CONTAINS INFORMATION THAT IS PROPRIETARY TO MOLEX ELECTRONIC TECHNOLOGIES, LLC AND SHOULD NOT BE USED WITHOUT WRITTEN PERMISSION

FUNCTIONAL SYMBOLS
FA = 0
FC = 0
FP = 0
DIVISIONAL SYMBOLS

DIMENSION UNITS	SCALE
mm	1:1

GENERAL TOLERANCES (UNLESS SPECIFIED)

ANGULAR TOL	± 0.5°
4 PLACES	±
3 PLACES	±
2 PLACES	± 0.250
1 PLACE	± 0.38
0 PLACES	±

DRAFT WHERE APPLICABLE MUST REMAIN WITHIN DIMENSIONS

CURRENT REV DESC: New PN added

STATUS: Production
DRWN: VINOTHKUMAR S 2026-06-15
CHK'D: VINOTHKUMAR S 2026-07-07
APPR: Saravanakumar Murugesan 2026-07-07

molex

KK 156 HEADER ASSEMBLY
FRICTION LOCK VERTICAL SOLID BODY W/O PEGS

PRODUCT CUSTOMER DRAWING

DOCUMENT NUMBER	DOC TYPE	DOC PART	REVISION
SDA-41791	PSD	000	R2

THIRD ANGLE PROJECTION	DRAWING	SERIES	MATERIAL NUMBER	CUSTOMER	SHEET NUMBER
	C-SIZE	41791		GENERAL MARKET	12 OF 13

FORMAT: TC-tb-prod-C
REVISION: B
DATE: 2022/08/01

Options	Group	A-41791-1350		Group	A-41791-1361		Group	A-41791-1371
	Header No	41790-0011		Header No	41790-0011		Header No	41790-0004
	Pin No	43294-0214		Pin No	43294-0214		Pin No	43294-0355
	Plating	197-TIN		Plating	197-TIN		Plating	154-TIN
	Pin Length L	18.29/.720		Pin Length L	18.29/.720		Pin Length L	22.35/.880
	Mating M	11.43/.450		Mating M	11.43/.450		Mating M	11.56/.455
	Gold Loc G	N/A		Gold Loc G	N/A		Gold Loc G	N/A
	PC Tail P	3.56/.140		PC Tail P	3.56/.140		PC Tail P	7.49/.295
	Tin Loc T	OVERALL		Tin Loc T	OVERALL		Tin Loc T	OVERALL
	Voided Ckts	6,10		Voided Ckts	8,10		Voided Ckts	2
	Pack Per	PK-41791-001		Pack Per	PK-41791-001		Pack Per	PK-41791-002
Ckts	Item Number			Item Number			Item Number	
2								
3								
4							41791-0402	
5								
6								
7								
8								
9								
10								
11	41791-1350	A-41791-1350		41791-1361				
12								
13								
14								
15								
16								
17								
18								

FUNCTIONAL SYMBOLS
FA = 0
FC = 0
FP = 0
DIVISIONAL SYMBOLS

THIS DRAWING CONTAINS INFORMATION THAT IS PROPRIETARY TO MOLEX ELECTRONIC TECHNOLOGIES, LLC AND SHOULD NOT BE USED WITHOUT WRITTEN PERMISSION

DIMENSION UNITS: mm
SCALE: 1:1

GENERAL TOLERANCES (UNLESS SPECIFIED)

ANGULAR TOL	± 0.5°
4 PLACES	±
3 PLACES	±
2 PLACES	± 0.250
1 PLACE	± 0.38
0 PLACES	±

DRAFT WHERE APPLICABLE MUST REMAIN WITHIN DIMENSIONS

CURRENT REV DESC: New PN added

STATUS: Production
DRWN: VINOTHKUMAR S 2026-06-15
CHK'D: VINOTHKUMAR S 2026-07-07
APPR: Saravanakumar Murugesan 2026-07-07

THIRD ANGLE PROJECTION | DRAWING: C-SIZE | SERIES: 41791

molex

KK 156 HEADER ASSEMBLY
FRICTION LOCK VERTICAL SOLID BODY W/O PEGS

PRODUCT CUSTOMER DRAWING

DOCUMENT NUMBER	DOC TYPE	DOC PART	REVISION
SDA-41791	PSD	000	R2

MATERIAL NUMBER	CUSTOMER	SHEET NUMBER
	GENERAL MARKET	13 OF 13

OPTIONS								
	Group	A-41791-0002/0018	Group	A-41791-0019/0035	Group	A-41791-0036/0052	Group	A-41791-0059/0074
	Header No:	41790-0002/0018	Header No:	41790-0002/0018	Header No:	41790-0002/0018	Header No:	41790-0002/0018
	Pin No:	43294-0214	Pin No:	43294-0215	Pin No:	43294-0214	Pin No:	43294-0214
	Plating:	197 – TIN	Plating:	241 – GOLD	Plating:	197 – TIN	Plating:	197 – TIN
	Pin Length L	18.29 / .720	Pin Length L	18.29 / .720	Pin Length L	18.29 / .720	Pin Length L	18.29 / .720
	Mating M	11.43 / .450	Mating M	11.43 / .450	Mating M	11.43 / .450	Mating M	11.43 / .450
	Gold Loc G	N/A	Gold Loc G	6.85/ .270	Gold Loc G	N/A	Gold Loc G	N/A
	PC Tail P	3.56 / .140	PC Tail P	3.56 / .140	PC Tail P	3.56 / .140	PC Tail P	3.56 / .140
	Tin Loc T	OVERALL	Tin Loc T	4.06/ .160	Tin Loc T	OVERALL	Tin Loc T	OVERALL
	Voided Ckts	NONE	Voided Ckts	NONE	Voided Ckts	2	Voided Ckts	3
	Pack Per	PK-41791-001	Pack Per	PK-41791-001	Pack Per	PK-41791-001	Pack Per	PK-41791-001

Ckts	Material No	Engineer Number	Material No	Engineer Number	Material No	Engineer Number	Material No	Engineer Number
2	26-60-4020	A-41791-0002	26-61-4020	A-41791-0019	26-62-4020	A-41791-0036		
3	26-60-4030	A-41791-0003	26-61-4030	A-41791-0020	26-62-4030	A-41791-0037	26-62-4036	A-41791-0059
4	26-60-4040	A-41791-0004	26-61-4040	A-41791-0021	26-62-4040	A-41791-0038	26-62-4046	A-41791-0060
5	26-60-4050	A-41791-0005	26-61-4050	A-41791-0022	26-62-4050	A-41791-0039	26-62-4056	A-41791-0061
6	26-60-4060	A-41791-0006	26-61-4060	A-41791-0023	26-62-4060	A-41791-0040	26-62-4066	A-41791-0062
7	26-60-4070	A-41791-0007	26-61-4070	A-41791-0024	26-62-4070	A-41791-0041	26-62-4076	A-41791-0063
8	26-60-4080	A-41791-0008	26-61-4080	A-41791-0025	26-62-4080	A-41791-0042	26-62-4086	A-41791-0064
9	26-60-4090	A-41791-0009	26-61-4090	A-41791-0026	26-62-4090	A-41791-0043	26-62-4096	A-41791-0065
10	26-60-4100	A-41791-0010	26-61-4100	A-41791-0027	26-62-4100	A-41791-0044	26-62-4106	A-41791-0066
11	26-60-4110	A-41791-0011	26-61-4110	A-41791-0028	26-62-4110	A-41791-0045	26-62-4116	A-41791-0067
12	26-60-4120	A-41791-0012	26-61-4120	A-41791-0029	26-62-4120	A-41791-0046	26-62-4126	A-41791-0068
13	26-60-4130	A-41791-0013	26-61-4130	A-41791-0030	26-62-4130	A-41791-0047	26-62-4136	A-41791-0069
14	26-60-4140	A-41791-0014	26-61-4140	A-41791-0031	26-62-4140	A-41791-0048	26-62-4146	A-41791-0070
15	26-60-4150	A-41791-0015	26-61-4150	A-41791-0032	26-62-4150	A-41791-0049	26-62-4156	A-41791-0071
16	26-60-4160	A-41791-0016	26-61-4160	A-41791-0033	26-62-4160	A-41791-0050	26-62-4166	A-41791-0072
17	26-60-4170	A-41791-0017	26-61-4170	A-41791-0034	26-62-4170	A-41791-0051	26-62-4176	A-41791-0073
18	26-60-4180	A-41791-0018	26-61-4180	A-41791-0035	26-62-4180	A-41791-0052	26-62-4186	A-41791-0074

REV:	ECM INFORMATION	TITLE:	SHEET No.
R1	ECM NO.: **108539** DATE: **1/24/2017**	**KK 156 HEADER ASSEMBLY FRICTION LOCK VERTICAL SOLID BODY W/O PEGS**	**- 2 -**

DOCUMENT NUMBER:	CREATED / REVISED BY:	CHECKED BY:	APPROVED BY:
SDA- 41791	**CSLAFTER**	**MKIPPER**	**FSMITH**

OPTIONS								
	Group	A-41791-0086/0100	Group	A-41791-0309/0308	Group	A-41791-0464/0480	Group	A-41791-0481/0491
	Header No:	41790-0002/0018	Header No:	41790-0002/0018	Header No:	41790-0002/0018	Header No:	41790-0002/0012
	Pin No:	43294-0214	Pin No:	43294-0215	Pin No:	43294-0240	Pin No:	43294-0355
	Plating:	197 – TIN	Plating:	241 – GOLD	Plating:	197 – TIN	Plating:	154 – TIN
	Pin Length L	18.29 / .720	Pin Length L	18.29 / .720	Pin Length L	19.05 / .750	Pin Length L	22.35 / .880
	Mating M	11.43 / .450	Mating M	11.43 / .450	Mating M	11.43 / .450	Mating M	11.56 / .455
	Gold Loc G	N/A	Gold Loc G	6.85/ .270	Gold Loc G	N/A	Gold Loc G	N/A
	PC Tail P	3.56 / .140	PC Tail P	3.56 / .140	PC Tail P	4.32 / .170	PC Tail P	7.49 / .295
	Tin Loc T	OVERALL	Tin Loc T	4.06/ .160	Tin Loc T	OVERALL	Tin Loc T	OVERALL
	Voided Ckts	2, 4	Voided Ckts	2	Voided Ckts	NONE	Voided Ckts	NONE
	Pack Per	PK-41791-001	Pack Per	PK-41791-001	Pack Per	PK-41791-001	Pack Per	PK-41791-002

Ckts	Material No	Engineer Number	Material No	Engineer Number	Material No	Engineer Number	Material No	Engineer Number
2					26-60-4023	A-41791-0464	41791-0481	A-41791-0481
3			26-63-4031	A-41791-0310	26-60-4033	A-41791-0465	41791-0482	A-41791-0482
4	26-62-4041	A-41791-0086		A-41791-0311	26-60-4043	A-41791-0466	41791-0483	A-41791-0483
5	26-62-4051	A-41791-0087	26-63-4051	A-41791-0312	26-60-4053	A-41791-0467	41791-0484	A-41791-0484
6	26-62-4061	A-41791-0088	26-63-4061	A-41791-0313	26-60-4063	A-41791-0468	41791-0485	A-41791-0485
7		A-41791-0089	26-63-4071	A-41791-0314	26-60-4073	A-41791-0469	41791-0486	A-41791-0486
8	41791-0090	A-41791-0090		A-41791-0315	26-60-4083	A-41791-0470	41791-0487	A-41791-0487
9		A-41791-0091		A-41791-0316	26-60-4093	A-41791-0471	41791-0488	A-41791-0488
10	26-62-4101	A-41791-0092		A-41791-0317	26-60-4103	A-41791-0472	41791-0489	A-41791-0489
11		A-41791-0093		A-41791-0318	26-60-4113	A-41791-0473	41791-0490	A-41791-0490
12		A-41791-0094		A-41791-0319	26-60-4123	A-41791-0474	41791-0491	A-41791-0491
13		A-41791-0095		A-41791-0320	26-60-4133	A-41791-0475		
14		A-41791-0096		A-41791-0321	26-60-4143	A-41791-0476		
15		A-41791-0097		A-41791-0322	26-60-4153	A-41791-0477		
16		A-41791-0098		A-41791-0323	26-60-4163	A-41791-0478		
17		A-41791-0099		A-41791-0324	26-60-4173	A-41791-0479		
18		A-41791-0100		A-41791-0325	26-60-4183	A-41791-0480		

REV:	ECM INFORMATION	TITLE:	SHEET No.
R1	ECM NO.: **108539** DATE: **1/24/2017**	**KK 156 HEADER ASSEMBLY FRICTION LOCK VERTICAL SOLID BODY W/O PEGS**	**- 3 -**

DOCUMENT NUMBER:	CREATED / REVISED BY:	CHECKED BY:	APPROVED BY:
SDA- 41791	**CSLAFTER**	**MKIPPER**	**FSMITH**

OPTIONS								
	Group	A-41791-0583/0597	Group	A-41791-0598/0609	Group	A-41791-0638/0653	Group	A-41791-0773/0785
	Header No:	41790-0002/0018	Header No:	41790-0002/0018	Header No:	41790-0002/0018	Header No:	41790-0006/0018
	Pin No:	43294-0214	Pin No:	43294-0214	Pin No:	43294-0215	Pin No:	43294-0214
	Plating:	197 – TIN	Plating:	197 – TIN	Plating:	241 – GOLD	Plating:	197-TIN
	Pin Length L	18.29 / .720	Pin Length L	18.29 / .720	Pin Length L	18.29 / .720	Pin Length L	18.29/.720
	Mating M	11.43 / .450	Mating M	11.43 / .450	Mating M	11.43 / .450	Mating M	11.43/.450
	Gold Loc G	N/A	Gold Loc G	N/A	Gold Loc G	6.85/ .270	Gold Loc G	N/A
	PC Tail P	3.56 / .140	PC Tail P	3.56 / .140	PC Tail P	3.56 / .140	PC Tail P	3.56/.140
	Tin Loc T	OVERALL	Tin Loc T	OVERALL	Tin Loc T	4.06/ .160	Tin Loc T	OVERALL
	Voided Ckts	4	Voided Ckts	7	Voided Ckts	3	Voided Ckts	3, 6
	Pack Per	PK-41791-001	Pack Per	PK-41791-001	Pack Per	PK-41791-001	Pack Per	PK-41791-001

Ckts	Material No	Engineer Number	Material No	Engineer Number	Material No	Engineer Number	Item Number
2							
3					26-63-4032	A-41791-0638	
4	27-62-4049	A-41791-0583			41791-0639	A-41791-0639	
5	27-62-4059	A-41791-0584			26-63-4052	A-41791-0640	
6	27-62-4069	A-41791-0585			26-63-4062	A-41791-0641	
7	27-62-4079	A-41791-0586	41791-0598	A-41791-0598	41791-0642	A-41791-0642	41791-0774
8	27-62-4089	A-41791-0587	41791-0599	A-41791-0599	26-63-4082	A-41791-0643	
9	27-62-4099	A-41791-0588	27-66-4090	A-41791-0600	41791-0644	A-41791-0644	
10	27-62-4109	A-41791-0589	41791-0601	A-41791-0601	41791-0645	A-41791-0645	
11	27-62-4119	A-41791-0590	41791-0602	A-41791-0602	41791-0646	A-41791-0646	
12	27-62-4129	A-41791-0591	41791-0603	A-41791-0603	41791-0647	A-41791-0647	
13	27-62-4139	A-41791-0592	41791-0604	A-41791-0604	41791-0648	A-41791-0648	
14	27-62-4149	A-41791-0593	41791-0605	A-41791-0605	41791-0649	A-41791-0649	
15	27-62-4159	A-41791-0594	41791-0606	A-41791-0606	41791-0650	A-41791-0650	
16	27-62-4169	A-41791-0595	41791-0607	A-41791-0607	41791-0651	A-41791-0651	
17	27-62-4179	A-41791-0596	41791-0608	A-41791-0608	41791-0652	A-41791-0652	
18	27-62-4189	A-41791-0597	41791-0609	A-41791-0609	41791-0653	A-41791-0653	

REV:	ECM INFORMATION	TITLE:	SHEET No.
R1	ECM NO.: **108539** DATE: **1/24/2017**	**KK 156 HEADER ASSEMBLY FRICTION LOCK VERTICAL SOLID BODY W/O PEGS**	**- 4 -**

DOCUMENT NUMBER:	CREATED / REVISED BY:	CHECKED BY:	APPROVED BY:
SDA- 41791	**CSLAFTER**	**MKIPPER**	**FSMITH**

OPTIONS								
	Group	A-41791-0815/0831	Group	A-41791-0832/0848	Group	A-41791-0849/0865	Group	A-41791-0883/0891
	Header No:	41790-0002/0018	Header No:	41790-0002/0018	Header No:	41790-0002/0018	Header No:	41790-0010/0018
	Pin No:	43294-0661	Pin No:	43294-0209	Pin No:	43294-0210	Pin No:	43294-0214
	Plating:	197 – TIN	Plating:	208 – 15 GOLD	Plating:	228 – 30 GOLD	Plating:	197 – TIN
	Pin Length L	30.48 / 1.200	Pin Length L	18.29/. 720	Pin Length L	18.29/. 720	Pin Length L	18.29 / .720
	Mating M	11.43 / .450	Mating M	11.43/. 450	Mating M	11.43/. 450	Mating M	11.43 / .450
	Gold Loc G	N/A	Gold Loc G	6.86/. 270	Gold Loc G	6.86/. 270	Gold Loc G	N/A
	PC Tail P	15.75/ .620	PC Tail P	3.56/. 140	PC Tail P	3.56/. 140	PC Tail P	3.56 / .140
	Tin Loc T	OVERALL	Tin Loc T	4.06/. 160	Tin Loc T	4.06/. 160	Tin Loc T	OVERALL
	Voided Ckts	NONE	Voided Ckts	NONE	Voided CKts	NONE	Voided Ckts	10
	Pack Per	PK-41791-003	Pack Per	PK-41791-001	Pack Per	PK-41791-001	Pack Per	PK-41791-001

Ckts	Item Number	Material No	Engineer Number	Material No	Engineer Number	Item Number
2	41791-0815	41791-0832	A-41791-0832	41791-0849	A-41791-0849	
3	41791-0816	41791-0833	A-41791-0833	41791-0850	A-41791-0850	
4	41791-0817	41791-0834	A-41791-0834	41791-0851	A-41791-0851	
5	41791-0818	41791-0835	A-41791-0835	41791-0852	A-41791-0852	
6	41791-0819	41791-0836	A-41791-0836	41791-0853	A-41791-0853	
7	41791-0820	41791-0837	A-41791-0837	41791-0854	A-41791-0854	
8	41791-0821	41791-0838	A-41791-0838	41791-0855	A-41791-0855	
9	41791-0822	41791-0839	A-41791-0839	41791-0856	A-41791-0856	
10	41791-0823	41791-0840	A-41791-0840	41791-0857	A-41791-0857	41791-0883
11	41791-0824	41791-0841	A-41791-0841	41791-0858	A-41791-0858	41791-0884
12	41791-0825	41791-0842	A-41791-0842	41791-0859	A-41791-0859	41791-0885
13	41791-0826	41791-0843	A-41791-0843	41791-0860	A-41791-0860	41791-0886
14	41791-0827	41791-0844	A-41791-0844	41791-0861	A-41791-0861	41791-0887
15	41791-0828	41791-0845	A-41791-0845	41791-0862	A-41791-0862	41791-0888
16	41791-0829	41791-0846	A-41791-0846	41791-0863	A-41791-0863	41791-0889
17	41791-0830	41791-0847	A-41791-0847	41791-0864	A-41791-0864	41791-0890
18	41791-0831	41791-0848	A-41791-0848	41791-0865	A-41791-0865	41791-0891

REV:	ECM INFORMATION	TITLE:	SHEET No.
R1	ECM NO.: **108539** DATE: **1/24/2017**	**KK 156 HEADER ASSEMBLY FRICTION LOCK VERTICAL SOLID BODY W/O PEGS**	**- 5 -**

DOCUMENT NUMBER:	CREATED / REVISED BY:	CHECKED BY:	APPROVED BY:
SDA- 41791	**CSLAFTER**	**MKIPPER**	**FSMITH**

OPTIONS								
	Group	A-41791-0892/0908	Group	A-41791-0922/0933	Group	41791-0934/0948	Group	41791-0966/0976
	Header No:	41790-0002/0018	Header No:	41790-0007/0018	Header No:	41790-0004/0018	Header No:	41790-0007/0018
	Pin No:	43294-0299	Pin No:	43294-0214	Pin No:	43294-0209	Pin No:	43294-0214
	Plating:	208 – 15 GOLD	Plating:	197 – TIN	Plating:	208 – 15 GOLD	Plating:	197 – TIN
	Pin Length L	20.83 / .820	Pin Length L	18.29 / .720	Pin Length L	18.29/. 720	Pin Length L	18.29/. 720
	Mating M	11.43 / .450	Mating M	11.43 / .450	Mating M	11.43 / .450	Mating M	11.43/. 450
	Gold Loc G	6.83/. 270	Gold Loc G	N/A	Gold Loc G	6.86/ .270	Gold Loc G	N/A
	PC Tail P	6.10/ .240	PC Tail P	3.56 / .140	PC Tail P	3.56/. 140	PC Tail P	3.56/. 140
	Tin Loc T	6.35/ .250	Tin Loc T	OVERALL	Tin Loc T	4.06/. 160	Tin Loc T	OVERALL
	Voided Ckts	NONE	Voided Ckts	5, 7	Voided Ckts	4	Voided Ckts	3, 7, 8
	Pack Per	PK-41791-002	Pack Per	PK-41791-001	Pack Per	PK-41791-001	Pack Per	PK-41791-001

Ckts	Item Number	Item Number	Item Number	Item Number
2	41791-0892			
3	41791-0893			
4	41791-0894		41791-0934	
5	41791-0895		41791-0935	
6	41791-0896		41791-0936	
7	41791-0897	41791-0922	41791-0937	
8	41791-0898	41791-0923	41791-0938	41791-0966
9	41791-0899	41791-0924	41791-0939	41791-0967
10	41791-0900	41791-0925	41791-0940	41791-0968
11	41791-0901	41791-0926	41791-0941	41791-0969
12	41791-0902	41791-0927	41791-0942	41791-0970
13	41791-0903	41791-0928	41791-0943	41791-0971
14	41791-0904	41791-0929	41791-0944	41791-0972
15	41791-0905	41791-0930	41791-0945	41791-0973
16	41791-0906	41791-0931	41791-0946	41791-0974
17	41791-0907	41791-0932	41791-0947	41791-0975
18	41791-0908	41791-0933	41791-0948	41791-0976

REV:	ECM INFORMATION	TITLE:	SHEET No.
R1	ECM NO.: **108539** DATE: **1/24/2017**	**KK 156 HEADER ASSEMBLY FRICTION LOCK VERTICAL SOLID BODY W/O PEGS**	**- 6 -**

DOCUMENT NUMBER:	CREATED / REVISED BY:	CHECKED BY:	APPROVED BY:
SDA- 41791	**CSLAFTER**	**MKIPPER**	**FSMITH**

OPTIONS								
	Group	41791-0977/0993	Group	41791-0994/1002	Group	A-41791-1036 / 1048	Group	A-41791-1049/1062
	Header No:	41790-0002/0018	Header No:	41790-0010/0018	Header No:	41790-0006 / 0018	Header No:	41790-0005/0018
	Pin No:	43294-0345	Pin No:	43294-0209	Pin No:	43294-0214	Pin No:	43294-0214
	Plating:	228 – 30 GOLD	Plating:	208 – 15 GOLD	Plating:	197 – TIN	Plating:	197 – TIN
	Pin Length L	22.10/. 870	Pin Length L	18.29/. 720	Pin Length L	18.29 / .720	Pin Length L	18.29 / .720
	Mating M	11.43/. 450	Mating M	11.43 / .450	Mating M	11.43 / .450	Mating M	11.43 / .450
	Gold Loc G	10.02/. 400	Gold Loc G	6.86/ .270	Gold Loc G	N/A	Gold Loc G	N/A
	PC Tail P	7.37/. 290	PC Tail P	3.56/. 140	PC Tail P	3.56 / .140	PC Tail P	3.56 / .140
	Tin Loc T	5.08/. 200	Tin Loc T	4.06/. 160	Tin Loc T	OVERALL	Tin Loc T	OVERALL
	Voided Ckts	None	Voided Ckts	3, 4, 5, 8, 9, 10	Voided Ckts	4, 6	Voided Ckts	2, 5
	Pack Per	PK-41791-002	Pack Per	PK-41791-001	Pack Per	PK-41791-001	Pack Per	PK-41791-001

Ckts	Item Number	Item Number	Material No	Engineer Number	Item Number
2	41791-0977				
3	41791-0978				
4	41791-0979				
5	41791-0980				
6	41791-0981			A-41791-1036	
7	41791-0982		41791-1037	A-41791-1037	41791-1051
8	41791-0983		41791-1038	A-41791-1038	
9	41791-0984			A-41791-1039	
10	41791-0985	41791-0994		A-41791-1040	
11	41791-0986	41791-0995		A-41791-1041	
12	41791-0987	41791-0996		A-41791-1042	
13	41791-0988	41791-0997		A-41791-1043	
14	41791-0989	41791-0998		A-41791-1044	
15	41791-0990	41791-0999		A-41791-1045	
16	41791-0991	41791-1000		A-41791-1046	
17	41791-0992	41791-1001		A-41791-1047	
18	41791-0993	41791-1002		A-41791-1048	

REV:	ECM INFORMATION	TITLE:	SHEET No.
R1	ECM NO.: **108539** DATE: **1/24/2017**	**KK 156 HEADER ASSEMBLY FRICTION LOCK VERTICAL SOLID BODY W/O PEGS**	**- 7 -**

DOCUMENT NUMBER:	CREATED / REVISED BY:	CHECKED BY:	APPROVED BY:
SDA- 41791	**CSLAFTER**	**MKIPPER**	**FSMITH**

OPTIONS

Group	A-41791-1063/1071	Group	A-41791-1074/1088	Group	A-41791-1089/1105	Group	A-41791-1107
Header No:	41790-0010/0018	Header No:	41790-0004/0018	Header No:	41790-0002/0018	Header No:	41790-0006/0018
Pin No:	43294-0214	Pin No:	43294-0215	Pin No:	43294-0212	Pin No:	43294-0213
Plating:	197 – TIN	Plating:	241 – GOLD	Plating:	222 – TIN	Plating:	154 – TIN
Pin Length L	18.29 / .720	Pin Length L	18.29 / .720	Pin Length L	18.29 / .720	Pin Length L	18.29 / .720
Mating M	11.43 / .450	Mating M	11.43 / .450	Mating M	11.43 / .450	Mating M	11.43 / .450
Gold Loc G	N/A	Gold Loc G	6.85/ .270	Gold Loc G	N/A	Gold Loc G	N/A
PC Tail P	3.56 / .140	PC Tail P	3.56 / .140	PC Tail P	3.56 / .140	PC Tail P	3.56 / .140
Tin Loc T	OVERALL	Tin Loc T	4.06/ .160	Tin Loc T	OVERALL	Tin Loc T	OVERALL
Voided Ckts	5, 10	Voided Ckts	2, 3, 4	Voided Ckts	NONE	Voided Ckts	6
Pack Per	PK-41791-001	Pack Per	PK-41791-001	Pack Per	PK-41791-001	Pack Per	PK-41791-001

Ckts	Item Number	Item Number	Item Number	Item Number
2			41791-1089	
3			41791-1090	
4			41791-1091	
5		41791-1075		
6			41791-1093	
7				41791-1107
8			41791-1095	
9			41791-1096	
10			41791-1097	
11	41791-1064		41791-1098	
12			41791-1099	
13				
14				
15				
16			41791-1103	
17				
18			41791-1105	

REV:	ECM INFORMATION	TITLE:	SHEET No.
R1	ECM NO.: **108539** DATE: **1/24/2017**	**KK 156 HEADER ASSEMBLY FRICTION LOCK VERTICAL SOLID BODY W/O PEGS**	**- 8 -**

DOCUMENT NUMBER:	CREATED / REVISED BY:	CHECKED BY:	APPROVED BY:
SDA- 41791	**CSLAFTER**	**MKIPPER**	**FSMITH**

OPTIONS								
	Group	A-41791-1120	Group	A-41791-1134	Group	A-41791-1150	Group	A-41791-1165
	Header No:	41790-0006	Header No:	41790-0004	Header No:	41790-0005	Header No:	41790-0006
	Pin No:	43294-0213	Pin No:	43294-0213	Pin No:	43294-0210	Pin No:	43294-0239
	Plating:	154 – TIN	Plating:	154 – TIN	Plating:	228 – 30 GOLD	Plating:	154 – TIN
	Pin Length L	18.29 / .720	Pin Length L	18.29 / .720	Pin Length L	18.29/. 720	Pin Length L	19.05 / .750
	Mating M	11.43 / .450	Mating M	11.43 / .450	Mating M	11.43/. 450	Mating M	11.43 / .450
	Gold Loc G	N/A	Gold Loc G	N/A	Gold Loc G	6.85/. 270	Gold Loc G	N/A
	PC Tail P	3.56 / .140	PC Tail P	3.56 / .140	PC Tail P	3.56/. 140	PC Tail P	4.32 / .170
	Tin Loc T	OVERALL	Tin Loc T	OVERALL	Tin Loc T	4.06/. 160	Tin Loc T	OVERALL
	Voided Ckts	2, 5	Voided Ckts	2, 3	Voided Ckts	2, 4	Voided Ckts	2, 3, 5
	Pack Per	PK-41791-001	Pack Per	PK-41791-001	Pack Per	PK-41791-001	Pack Per	PK-41791-001

Ckts	Item Number	Item Number	Item Number	Item Number
2				
3				
4		41791-1134		
5			41791-1150	
6	41791-1120			41791-1165
7				
8				
9				
10				
11				
12				
13				
14				
15				
16				
17				
18				

REV:	ECM INFORMATION	TITLE:	SHEET No.
R1	ECM NO.: **108539** DATE: **1/24/2017**	**KK 156 HEADER ASSEMBLY FRICTION LOCK VERTICAL SOLID BODY W/O PEGS**	**- 9 -**

DOCUMENT NUMBER:	CREATED / REVISED BY:	CHECKED BY:	APPROVED BY:
SDA- 41791	**CSLAFTER**	**MKIPPER**	**FSMITH**

OPTIONS

Group	A-41791-1179	Group	A-41791-1189	Group	A-41791-1203	Group	A-41791-1215
Header No:	41790-0008/0018	Header No:	41790-0006/0018	Header No:	41790-0009/0018	Header No:	41790-0006/0018
Pin No:	43294-0214	Pin No:	43294-0240	Pin No:	43294-0240	Pin No:	43294-0240
Plating:	197 – TIN	Plating:	197 – TIN	Plating:	197 – TIN	Plating:	197 – TIN
Pin Length L	18.29 / .720	Pin Length L	19.05 / .750	Pin Length L	19.05 / .750	Pin Length L	19.05 / .750
Mating M	11.43 / .450	Mating M	11.43 / .450	Mating M	11.43 / .450	Mating M	11.43 / .450
Gold Loc G	N/A	Gold Loc G	N/A	Gold Loc G	N/A	Gold Loc G	N/A
PC Tail P	3.56 / .140	PC Tail P	4.32 / .170	PC Tail P	4.32 / .170	PC Tail P	4.32 / .170
Tin Loc T	OVERALL	Tin Loc T	OVERALL	Tin Loc T	OVERALL	Tin Loc T	OVERALL
Voided Ckts	2,4,8	Voided Ckts	2,3,4,5	Voided Ckts	4,5,7,9	Voided Ckts	2,4,6
Pack Per	PK-41791-001	Pack Per	PK-41791-001	Pack Per	PK-41791-001	Pack Per	PK-41791-001

Ckts	Item Number	Item Number	Item Number	Item Number
2				
3				
4				
5				
6		41791-1189		
7				
8				
9	41791-1179			41791-1215
10			41791-1203	
11				
12				
13				
14				
15				
16				
17				
18				

REV:	ECM INFORMATION	TITLE:	SHEET No.
R1	ECM NO.: **108539** DATE: **1/24/2017**	**KK 156 HEADER ASSEMBLY FRICTION LOCK VERTICAL SOLID BODY W/O PEGS**	**- 10 -**

DOCUMENT NUMBER:	CREATED / REVISED BY:	CHECKED BY:	APPROVED BY:
SDA- 41791	**CSLAFTER**	**MKIPPER**	**FSMITH**

OPTIONS								
	Group	A-41791-1228	Group	A-41791-1240	Group	A-41791-1256	Group	A-41791-1264/1274
	Header No:	41790-0005/0018	Header No:	41790-0007	Header No:	41790-0012	Header No:	41790-0004/0014
	Pin No:	43294-0214	Pin No:	43294-0214	Pin No:	43294-0214	Pin No:	43294-0214
	Plating:	197 – TIN	Plating:	197 – TIN	Plating:	197 – TIN	Plating:	197 – TIN
	Pin Length L	18.29 / .720	Pin Length L	18.29 / .720	Pin Length L	18.29 / .720	Pin Length L	18.29 / .720
	Mating M	11.43 / .450	Mating M	11.43 / .450	Mating M	11.43 / .450	Mating M	11.43 / .450
	Gold Loc G	N/A	Gold Loc G	N/A	Gold Loc G	N/A	Gold Loc G	N/A
	PC Tail P	3.56 / .140	PC Tail P	3.56 / .140	PC Tail P	3.56 / .140	PC Tail P	3.56 / .140
	Tin Loc T	OVERALL	Tin Loc T	OVERALL	Tin Loc T	OVERALL	Tin Loc T	OVERALL
	Voided Ckts	4,5	Voided Ckts	2,3,5,6	Voided Ckts	8	Voided Ckts	2,3
	Pack Per	PK-41791-001	Pack Per	PK-41791-001	Pack Per	PK-41791-001	Pack Per	PK-41791-001

Ckts	Item Number	Item Number	Item Number	Item Number
2				
3				
4				41791-1264
5				
6				
7		41791-1240		
8	41791-1228			
9				
10				
11				
12			41791-1256	
13				
14				41791-1274
15				
16				
17				
18				

REV:	ECM INFORMATION	TITLE:	SHEET No.
R1	ECM NO.: **108539** DATE: **1/24/2017**	**KK 156 HEADER ASSEMBLY FRICTION LOCK VERTICAL SOLID BODY W/O PEGS**	**- 11 -**

DOCUMENT NUMBER:	CREATED / REVISED BY:	CHECKED BY:	APPROVED BY:
SDA- 41791	**CSLAFTER**	**MKIPPER**	**FSMITH**

OPTIONS

Group	A-41791-1285	Group	A-41791-1307/1316	Group	A-41791-1318	Group	A-41791-1333
Header No:	41790-0017	Header No:	41790-0009/0018	Header No:	41790-0005	Header No:	41790-0007
Pin No:	43294-0214	Pin No:	43294-0214	Pin No:	43294-0214	Pin No:	43294-0214
Plating:	197 – TIN	Plating:	197 – TIN	Plating:	197 – TIN	Plating:	197 – TIN
Pin Length L	18.29 / .720	Pin Length L	18.29 / .720	Pin Length L	18.29 / .720	Pin Length L	18.29 / .720
Mating M	11.43 / .450	Mating M	11.43 / .450	Mating M	11.43 / .450	Mating M	11.43 / .450
Gold Loc G	N/A	Gold Loc G	N/A	Gold Loc G	N/A	Gold Loc G	N/A
PC Tail P	3.56 / .140	PC Tail P	3.56 / .140	PC Tail P	3.56 / .140	PC Tail P	3.56 / .140
Tin Loc T	OVERALL	Tin Loc T	OVERALL	Tin Loc T	OVERALL	Tin Loc T	OVERALL
Voided Ckts	11	Voided Ckts	5,9	Voided Ckts	2,3,4	Voided Ckts	3,5,6
Pack Per	PK-41791-001	Pack Per	PK-41791-001	Pack Per	PK-41791-001	Pack Per	PK-41791-001

Ckts	Item Number	Item Number	Item Number	Item Number
2				
3				
4				
5			41791-1318	
6				
7				41791-1333
8				
9				
10				
11				
12				
13				
14		41791-1312		
15				
16				
17	41791-1285			
18				

REV:	ECM INFORMATION	TITLE:	SHEET No.
R1	ECM NO.: **108539** DATE: **1/24/2017**	**KK 156 HEADER ASSEMBLY FRICTION LOCK VERTICAL SOLID BODY W/O PEGS**	**- 12 -**

DOCUMENT NUMBER:	CREATED / REVISED BY:	CHECKED BY:	APPROVED BY:
SDA- 41791	**CSLAFTER**	**MKIPPER**	**FSMITH**

OPTIONS

Group	A-41791-1350	Group	A-41791-1361	Group		Group	
Header No:	41790-0011	Header No:	41790-0011	Header No:		Header No:	
Pin No:	43294-0214	Pin No:	43294-0214	Pin No:		Pin No:	
Plating:	197-TIN	Plating:	197-TIN	Plating:		Plating:	
Pin Length L	18.29/.720	Pin Length L	18.29/.720	Pin Length L		Pin Length L	
Mating M	11.43/.450	Mating M	11.43/.450	Mating M		Mating M	
Gold Loc G	N/A	Gold Loc G	N/A	Gold Loc G		Gold Loc G	
PC Tail P	3.56/.140	PC Tail P	3.56/.140	PC Tail P		PC Tail P	
Tin Loc T	OVERALL	Tin Loc T	OVERALL	Tin Loc T		Tin Loc T	
Voided Ckts	6,10	Voided Ckts	8,10	Voided Ckts		Voided Ckts	
Pack Per	PK-41791-001	Pack Per	PK-41791-001	Pack Per		Pack Per	

Ckts	Item Number	Item Number	Item Number	Item Number
2				
3				
4				
5				
6				
7				
8				
9				
10				
11	41791-1350	41791-1361		
12				
13				
14				
15				
16				
17				
18				

REV:	ECM INFORMATION	TITLE:	SHEET No.
R1	ECM NO.: **108539** DATE: **1/24/2017**	**KK 156 HEADER ASSEMBLY FRICTION LOCK VERTICAL SOLID BODY W/O PEGS**	**- 13 -**

DOCUMENT NUMBER:	CREATED / REVISED BY:	CHECKED BY:	APPROVED BY:
SDA- 41791	**CSLAFTER**	**MKIPPER**	**FSMITH**