THIS DRAWING IS THE PROPERTY OF FAIRCHILD SEMICONDUCTOR CORPORATION. NO USE THEREOF SHALL BE MADE OTHER THAN AS A REFERENCE FOR PROPOSALS AS SUBMITTED TO FAIRCHILD SEMICONDUCTOR CORPORATION FOR JOBS TO BE EXECUTED IN CONFORMITY WITH SUCH PROPOSALS UNLESS THE CONSENT OF SAID FAIRCHILD SEMICONDUCTOR CORPORATION HAS PREVIOUSLY BEEN OBTAINED. NO PART OF THIS DRAWING SHALL BE COPIED OR DUPLICATED OR ITS CONTENTS DISCLOSED. THE INFORMATION CONTAINED ON THIS DRAWING IS CONFIDENTIAL AND PROPRIETARY.

REVISIONS

LTR	DESCRIPTION	EDCN	DATE	BY/APP'D
A	RELEASE TO DOCUMENT CONTROL	09234	07/14/92	MS/CC
B	CHANGE TO FSPM DWG. ADD LAND PATERN		18-01-00	FEITAN

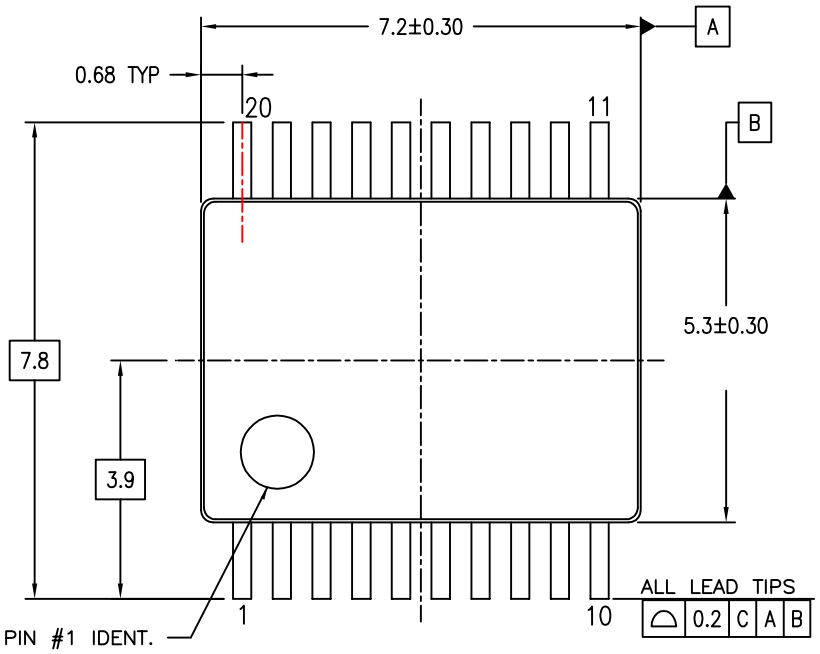

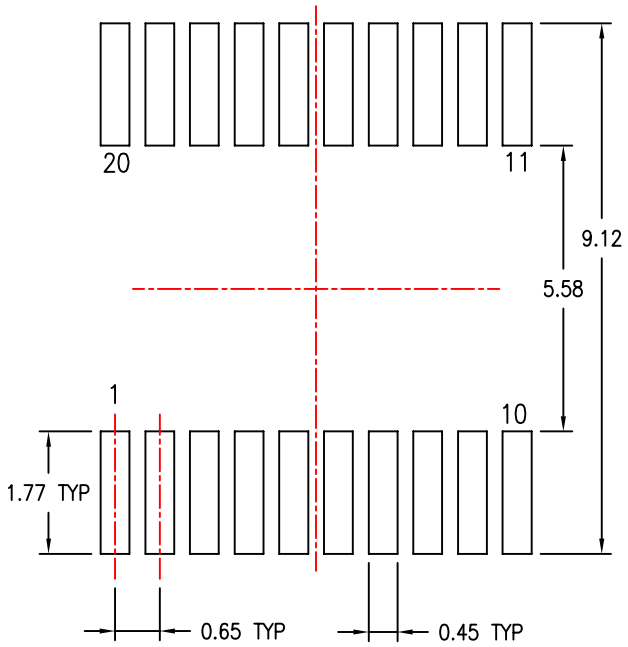

LAND PATTERN RECOMMENDATIONS

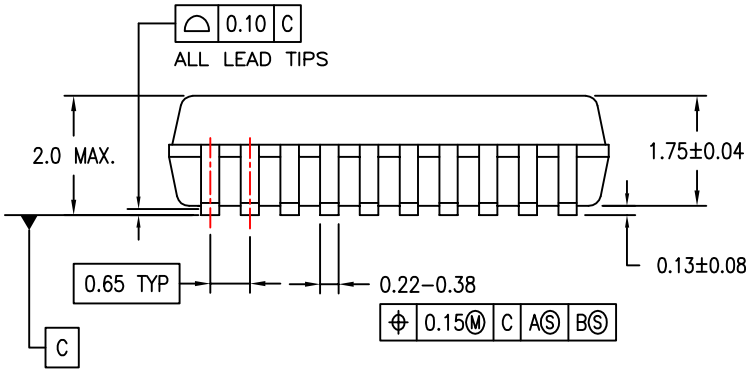

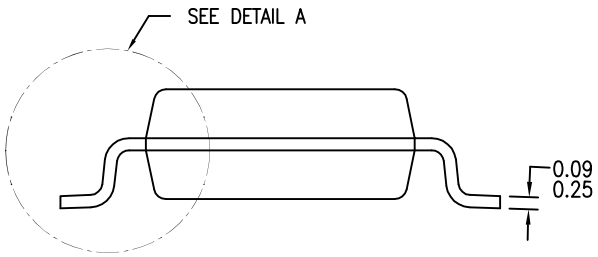

DIMENSIONS ARE IN MILLIMETERS

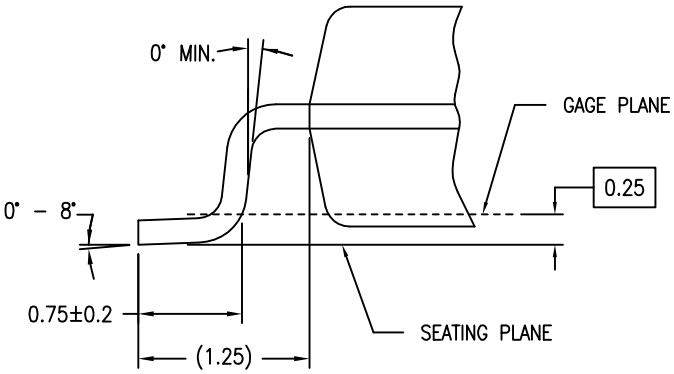

DETAIL A

NOTES:

A. CONFORMS TO JEDEC REGISTRATION MO-150, VARIATION AE, DATE 1/94.

B. DIMENSIONS ARE IN MILLIMETERS.

C. DIMENSIONS ARE EXCLUSIVE OF BURRS, MOLD FLASH, AND TIE BAR EXTRUSIONS.

D. DIMENSIONS AND TOLERANCES PER ASME Y14.5M - 1994.

MSA20REVB

APPROVALS	DATE
DRAWN FEITAN	18-01-00
DFTG. CHK.	
ENGR. CHK.	

FAIRCHILD SEMICONDUCTOR™ Bayan Lepas, FIZ, 11900, Penang, Malaysia.

20LD, SSOP, JEDEC MO-150, 5.3MM WIDE

PROJECTION INCH [MM]

SCALE	SIZE	DRAWING NUMBER	REV
N/A	C	MKT-MSA20	B

DO NOT SCALE DRAWING SHEET 1 of 1