THIS DRAWING IS UNPUBLISHED. RELEASED FOR PUBLICATION AUG ,2006.
© COPYRIGHT – BY TYCO ELECTRONICS CORPORATION. ALL RIGHTS RESERVED.

LOC	DIST
DW	–

REVISIONS

P	LTR	DESCRIPTION	DATE	DWN	APVD
	B	REVISED. (ECO-11-013077)	23JUN11	JC	WK

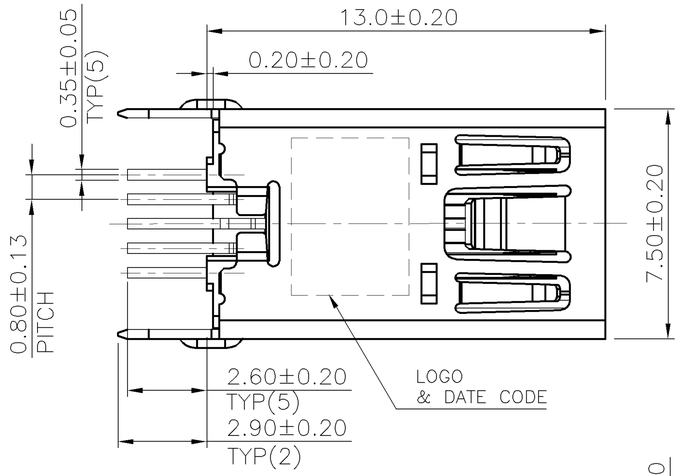

NOTE:
1. MATERIAL:
   HOUSING:PA9T, WITH 33% GF, UL 94V-0,BLACK COLOR.
   CONTACTS: NICKEL COPPER 0.20+/-0.015 THICKNESS.
   SHELL:STAINLESS,0.30+/-0.015 THICKNESS.
2. FINISH:
   CONTACTS: GOLD FLASH OVER
   0.762μm [30μ"] MIN. PALLADIUM-NICKEL PLATED ON CONTACT AREA,
   2.54μm [100μ"] MIN. MATTE-TIN ON SOLDER TAIL, WITH
   ENTIRE CONTACT UNDERPLATED 1.27μm [50μ"] MIN. NICKEL.
   SHELL: 2.54um [100μ"] MIN. MATTE-TIN
   1.27μm [50μ"] MIN. NICKEL PLATED.
3. WAVE SOLDER CAPABLE TO 265°C PER TE TEST SPEC.
   109-202, CONDITION B.

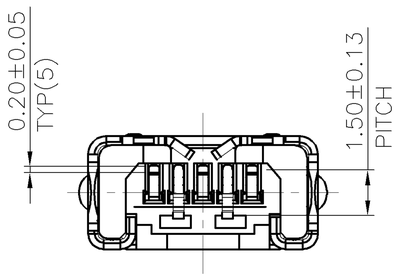

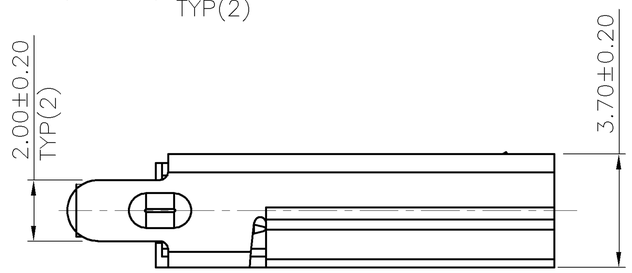

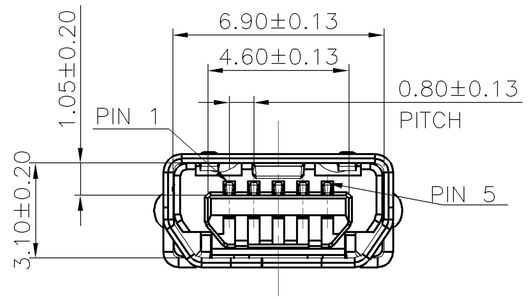

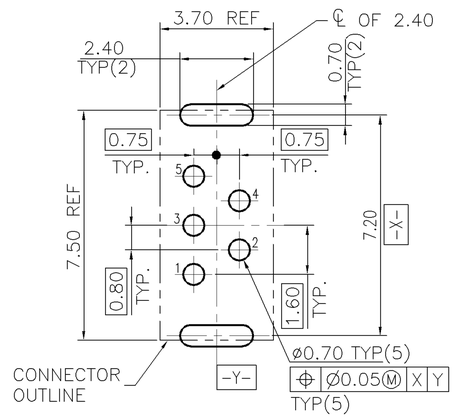

RECOMMENDED PCB LAYOUT (THICKNESS: 1.6)
(TOP VIEW,DIMENSION TOLERANCE : ±0.05)

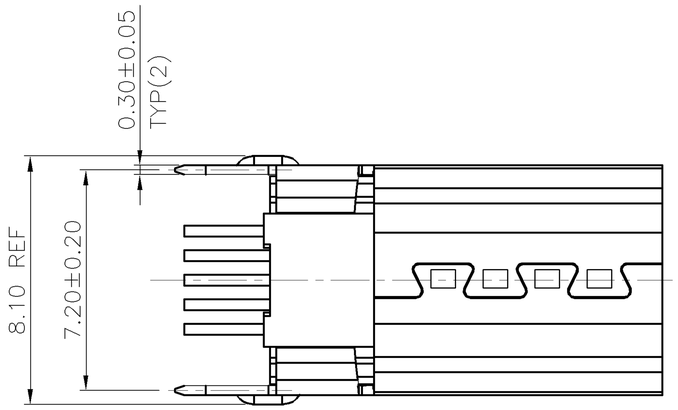

TAPE & REEL	2041064-2
TRAY	2041064-1
PACKING	PART NUMBER

THIS DRAWING IS A CONTROLLED DOCUMENT.

DIMENSIONS: MM

TOLERANCES UNLESS OTHERWISE SPECIFIED:

0 PLC	± –
1 PLC	± 0.30
2 PLC	± 0.20
3 PLC	± –
4 PLC	± –
ANGLES	± 3°

MATERIAL: SEE NOTE
FINISH: SEE NOTE

DWN F. YANG 31OCT2008
CHK S. CHIEN 31OCT2008
APVD W. KODAMA 31OCT2008
PRODUCT SPEC 108-57718
APPLICATION SPEC 501-57930
WEIGHT 2.65 GRAMS

TE Connectivity

NAME
MINI USB CONNECTOR
,RECEPTACLE,VERTICAL,DIP,AB TYPE

SIZE	CAGE CODE	DRAWING NO	RESTRICTED TO
A3	00779	C-2041064	–

CUSTOMER DRAWING | SCALE – | SHEET 1 OF 3 | REV B

AMP 1470-19 REV 31MAR2000

THIS DRAWING IS UNPUBLISHED. RELEASED FOR PUBLICATION AUG ,2006.
© COPYRIGHT – BY TYCO ELECTRONICS CORPORATION. ALL RIGHTS RESERVED.

LOC	DIST
DW	—

REVISIONS

P	LTR	DESCRIPTION	DATE	DWN	APVD
		SEE SHEET 1.			

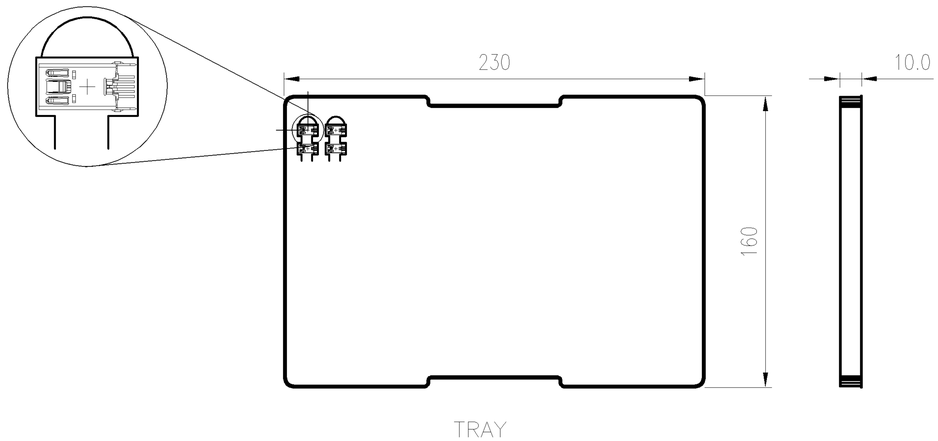

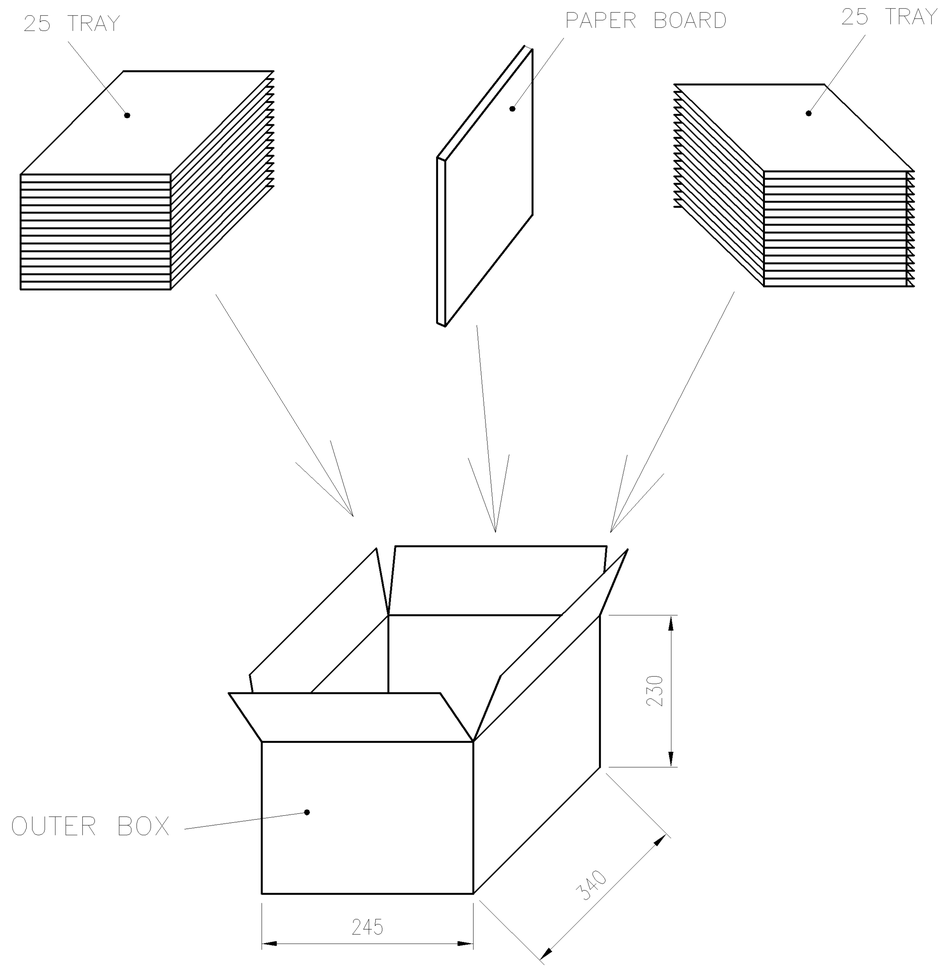

NOTE:

1. PACKAGING MATERIAL IN PLASTIC, RUBBER, INK, PIGMENT AND PAINT MUST MEET CONTROLLED SUBSTANCES PER TE SPEC. TEC–138–702.

   * CADMIUM AND CADMIUM COMPOUNDS NOT TO EXCEED: 5 PPM.
   * LEAD, CADMIUM, CHROM VI AND MERCURY NOT TO EXCEED: 100 PPM (COMBINED).

2. EACH BAG SHALL BE INCLUDED:

   * DESICCANT
   * HUMIDITY INDICATOR CARD
   * MOISTURE SENSITIVITY LABEL

6.24 Kg	3.70 Kg	100	50	5000 PCS
GROSS WEIGHT	NET WEIGHT	PCS/TRAY	TRAYS /CARTON	QUANTITY

THIS DRAWING IS A CONTROLLED DOCUMENT.

DIMENSIONS: MM

TOLERANCES UNLESS OTHERWISE SPECIFIED:
0 PLC ± –
1 PLC ± –
2 PLC ± –
3 PLC ± –
4 PLC ± –
ANGLES ± –

MATERIAL –

FINISH –

DWN
CHK
APVD
PRODUCT SPEC —
APPLICATION SPEC —
WEIGHT —

TE Connectivity

NAME
MINI USB CONNECTOR ,RECEPTACLE,VERTICAL,DIP,AB TYPE

SIZE	CAGE CODE	DRAWING NO	RESTRICTED TO
A3	00779	C–2041064	—

CUSTOMER DRAWING | SCALE — | SHEET 2 OF 3 | REV B

THIS DRAWING IS UNPUBLISHED. RELEASED FOR PUBLICATION AUG ,2006.
© COPYRIGHT – BY TYCO ELECTRONICS CORPORATION. ALL RIGHTS RESERVED.

LOC	DIST
DW	—

REVISIONS

P	LTR	DESCRIPTION	DATE	DWN	APVD
		SEE SHEET 1.			

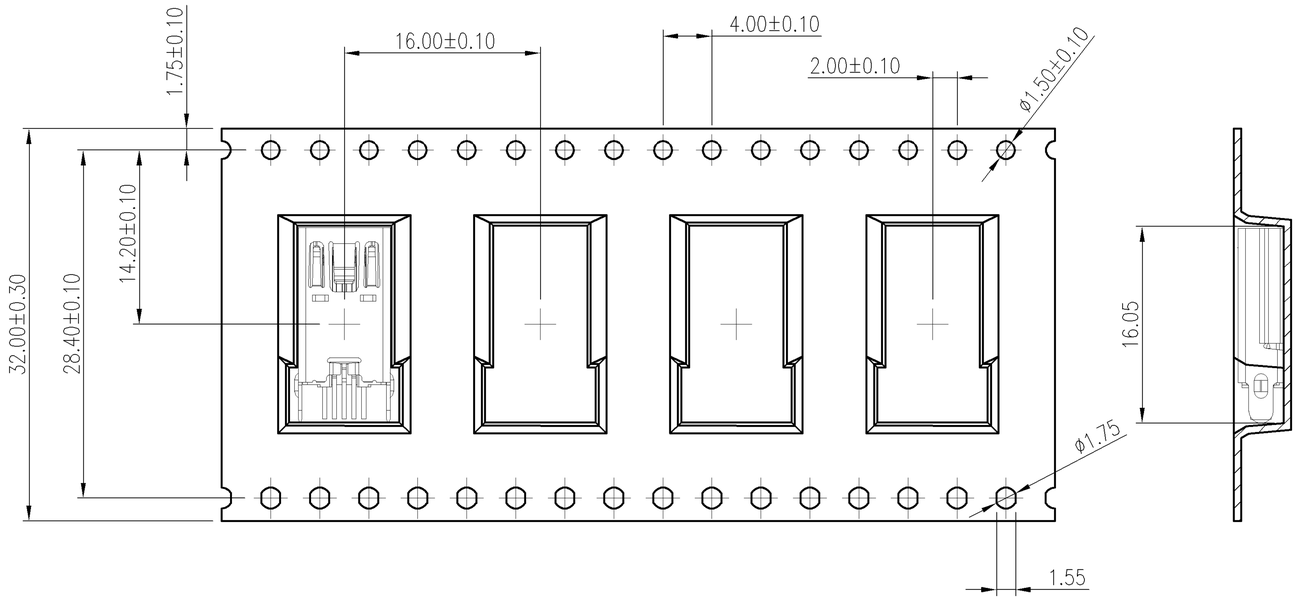

NOTES:

1. PACKAGE: 1000 PCS/REEL,8REELS/BOX
2. MATERIAL: BLACK CONDUCTIVE POLYSTYRONE ALLOY
3. THICKNESS: 0.40±0.05mm
4. APPLICABLE DOCUNMENTS:EIA-481-C
5. AFTER UNREELING DIRECTION MUST HAVE 11 PCS BLANK.(170mm Min.)
6. BEFORE UNREELING DIRECTION MUST HAVE 25 PCS BLANK.(400mm Min.)

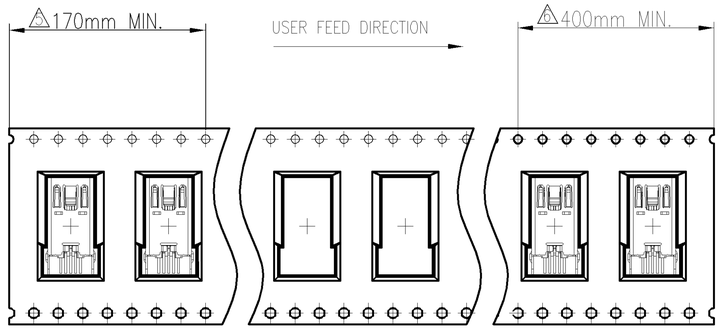

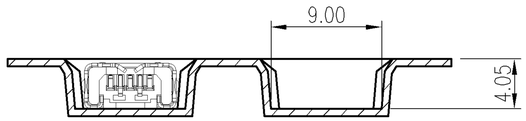

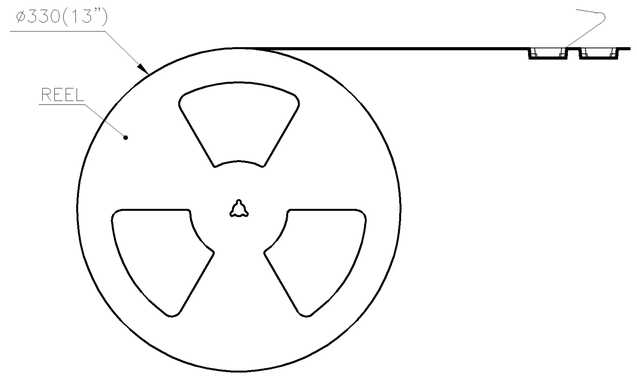

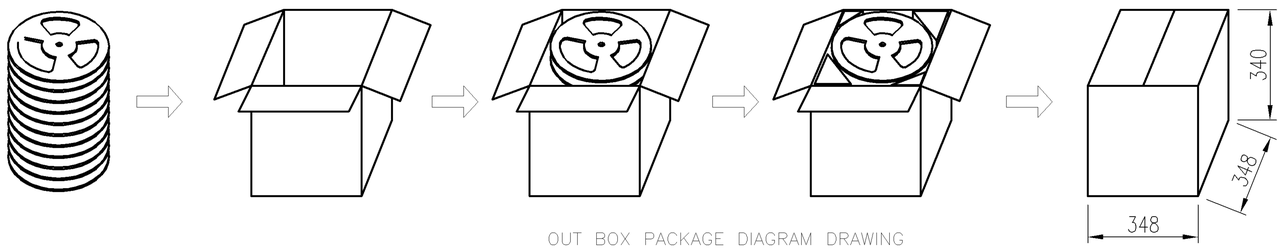

OUT BOX PACKAGE DIAGRAM DRAWING

9.58Kg	5.92Kg	1000	8	8000 PCS
GROSS WEIGHT	NET WEIGHT	PCS/REEL	REEL /CARTON	QUANTITY

THIS DRAWING IS A CONTROLLED DOCUMENT.

DIMENSIONS: MM

TOLERANCES UNLESS OTHERWISE SPECIFIED:

0 PLC	± –
1 PLC	± –
2 PLC	± –
3 PLC	± –
4 PLC	± –
ANGLES	± –

MATERIAL –

FINISH –

DWN

CHK

APVD

PRODUCT SPEC —

APPLICATION SPEC —

WEIGHT —

CUSTOMER DRAWING

TE Connectivity

NAME

MINI USB CONNECTOR
,RECEPTACLE,VERTICAL,DIP,AB TYPE

SIZE	CAGE CODE	DRAWING NO	RESTRICTED TO
A3	00779	C-2041064	—

SCALE	SHEET	REV
—	3 OF 3	B