THIS DRAWING IS UNPUBLISHED. RELEASED FOR PUBLICATION 20
© COPYRIGHT 20 BY - ALL RIGHTS RESERVED.

REVISIONS

P	LTR	DESCRIPTION	DATE	DWN	APVD
	A	INITIAL	22DEC2014	DW	CW

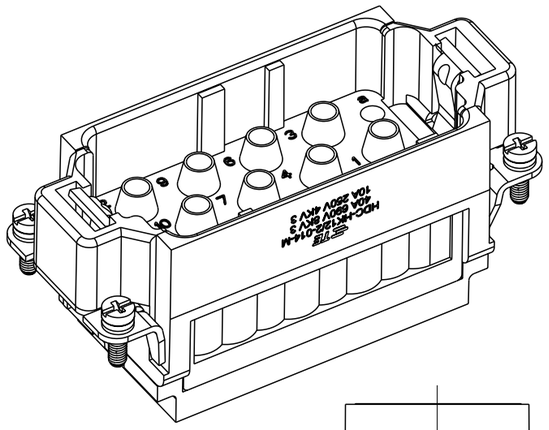

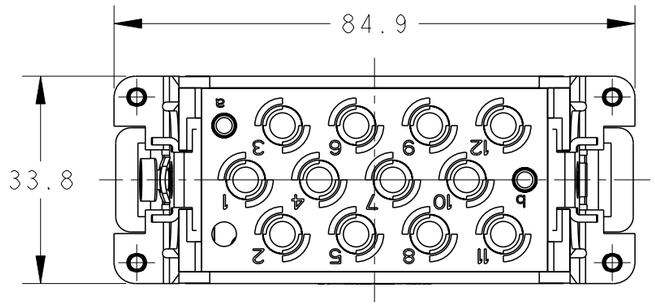

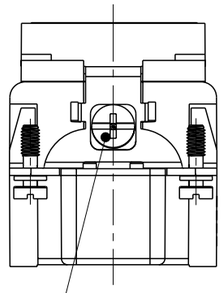

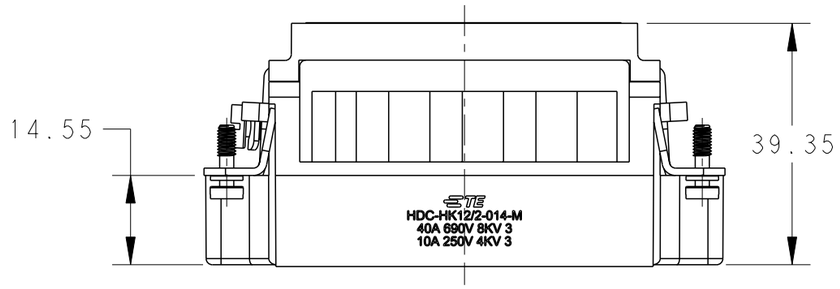

M4 THREAD
RECOMMENDED
TIGHTENING TORQUE
1.2Nm

4X M3 THREAD, RECOMMENDED
TIGHTENING TORQUE 0.5Nm

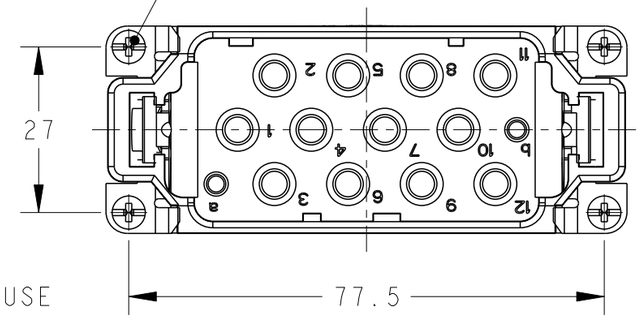

PANEL CUT FOR INSERTS FOR USE
WITHOUT HOODS/ HOUSINGS

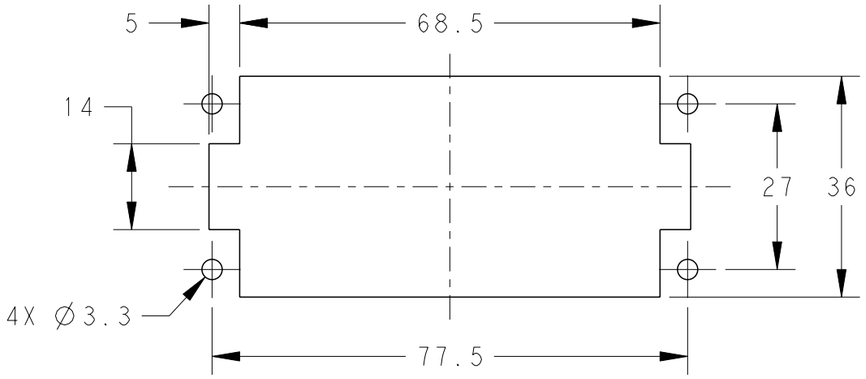

NOTES:

1. TECHNICAL CHARACTERISTICS:
   INSULATION MATERIAL: PC
   RATED VOLTAGE: POWER: 690 V; SIGNAL: 250V
   RATED CURRENT: POWER: 40 A; SIGNAL: 10A
   INSULATION RESISTANCE: >=400MΩ
   RATED IMPULSE VOLTAGE: POWER: 8 KV; SIGNAL: 4 KV
   POLLUTION DEGREE: 3
   CONTACT RESISTANCE: POWER: <=1 mΩ; SIGNAL: <=5 mΩ
   FLAMMABILITY: UL94V-0
   MATING CYCLES: 200 FOR SILVER PLATED
   500 FOR GOLD PLATED
   OPERATION TEMPERATURE: -40-+125°C
   WIRE RANGE: POWER: 1.5-6 mm² (16-10 AWG)
   SIGNAL: 0.14-2.5 mm² (26-14 AWG)
   CONTACT TYPE: CRIMP CONTACT

2. CONTACT NEED TO BE ORDERED SEPARATELY.

注释：

1. 技术参数：
   绝缘材料： PC
   额定电压： 电源： 690 V； 信号： 250 V
   额定电流： 电源： 40 A； 信号： 10 A
   绝缘电阻： >=400MΩ
   额定脉冲电压： 电源： 8 KV； 信号： 4 KV
   污染等级： 3
   接触电阻： 电源： <=1 mΩ； 信号： <=5 mΩ
   阻燃等级： UL94V-0
   插拔次数： 镀银端子： 200次
   镀金端子： 500次
   工作温度： -40-+125°C
   接线范围： 电源： 1.5-6 mm² (16-10 AWG)
   信号： 0.14-2.5 mm² (26-14 AWG)
   接线类型： 冷压接

2. 端子需要单独订购。

HK12/2-014-M	T2120142101-000
DESCRIPTION	PART NUMBER

THIS DRAWING IS A CONTROLLED DOCUMENT.

DIMENSIONS: mm

TOLERANCES UNLESS OTHERWISE SPECIFIED:
0 PLC ±-
1 PLC ±-
2 PLC ±--
3 PLC ±-
4 PLC ±-
ANGLES ±-

MATERIAL - -
FINISH - -

DWN David Wang 22DEC2014
CHK Chris Wang 22DEC2014
APVD Xiang Xu 22DEC2014
PRODUCT SPEC 108-137053
APPLICATION SPEC 114-137053
WEIGHT -

TE Connectivity

NAME HK12/2-014-M

SIZE A3 | CAGE CODE 00779 | DRAWING NO C-T2120142101000 | RESTRICTED TO -

Customer Drawing | SCALE 1:1 | SHEET 1 OF 1 | REV A

1470-19 (3/13)

Pro/ENGINEER DRAWING